Hang Zhou Color Powder Coating Equipment Co.,Ltd

THE NEW COLO

COLO is your global partner in powder coating solution.
From manual units to fully automated systems

2021

COLO

Manual coating system COLO-191S

Easy control of the application parameters

Clear interface

Easy for beginners

Powerful for specialists

- COLO-191S offer 3 pre-set standard programs for flat parts, corner parts and recoating. It is easy to use for beginners.
- Allows users to create and store their own programs, optimized for your work piece and powder. Each part can be coated with its ideal settings for experience operator.
- A clear and easy to use interface makes it easy for every user to take advantage of these powerful technologies.

Manual coating systems COLO-191S Series

COLO-191S-F

- Full Digital Control
- Available as powder box, hopper and cup feed units
- The closed hopper protects powder from the ambient and gently fluidizes it for an ideal powder delivery.

COLO-191S-B

- Up to 21 individual programs can be saved for future use.
- Lightweight powder spray gun with multiple nozzle options
- Excellent for coating cabinet, alloy wheels, pipes, aluminum profiles etc.
- High transfer efficiency in the industrial resulting in lower operating costs. Smooth surface finishes, excellent Faraday Cage penetration and low flow injector options.

Manual coating system COLO-191S

COLO-191S-T-C Cup Gun Coating System

- It is small cup type hopper (150mL) and use for sample coating of small quantity at laboratory.
- Discharge rate control by simple adjustment
- Spraying powder evenly, automatically
- Cleaning is easy and convenient to dismantle.

COLO-191S-T-B

- This hopper can carry 2 pounds powder and suitable for all powder injectors.

COLO-191S-T-H Mini Hopper Coating System

- Convenient for tiny products coating
- Mini hopper choice of small capacity (4 liters)
- Size of hopper is so small that removal is easy.
- Assembly and dismantle are easy so that cleaning is easy.

Dual Gun Powder Coating Machine

When two operators are required, COLO-191S-2 can be configured as a dual gun unit. Both operators have a powder coating gun, control unit and pump that can use powder from the same container and trolley.

COLO-191S-2

COLO-191S-B-2

COLO-800D-L2 Series

Intelligent powder coating system

COLO-800D-L5-B

Vibration manual spray system for FAST COLOR CHANGES

COLO-800D-L5

Applicable to a large number of coating jobs with powder 50L capacity.

Recoat mode

Adjusts both the volatge and current automatically for efficient recoating

Corner mode

Adjusts voltage while maintaining current output for coating complicated corners and recesses

Flat mode

Controls the voltage and current for maximum efficiency when coating flat workpieces.

Allows user manually adjust the voltage as needs

Innovative Powder Coating System

COLO-668-L3-B

Enhanced coating quality for flat and complex parts

- Reduced operator fatigue
- Effective coating in corners and recesses
- Improved recoating ability

COLO-668-L3

COLO-660 Series

COLO-660

COLO-660-B

Pre-Programmed Mode Control Unit

The COLO-660 features an innovative design with four pre-programmed control options that allow you to easily coat a variety of parts.

Technical Data

Weight of Gun	550 g	Voltage Output	100kV
Length of Gun	330 mm	Max. Current Output	180
Power Source	AC220V/110V	Polarity	Negative
Frequency	50~60Hz	Max. Injection Capacity	650g/Min
Power Consumption	50W	Air Consumption	MAX. 13N/h
Voltage Input	DC 24V	Temperature Rage in use	-10~50

■ COATING MODE

Operator controls the voltage and current for maximum efficiency

■ RECOAT MODE

Adjusts both the voltage and current for efficient recoating

■ COATING MODE

Adjusts voltage while maintaining current output for coating complicated corners and recesses

■ PULSE MODE

Rapidly recharges the powder for higher transfer efficiencies

COLO-500 Series Powder Coating System

COLO-900T-03C

Designed for small sample testing of powder manufacturers, Cup gun holds 120 grams.

COLO-900T-C

The perfect solution for laboratory powder coating or small coating applications

COLO-500 provides excellent transfer effeciencies, superior powder penetration and a quality finish. It is ideal for medium to large production runs.

COLO-500 Star

COLO-500 PGC1

PGC 1 Control module with the PG 1 Powder Gun

K2 Manual Coating System

K2 powder coating machine for high quality powder coating

K2-1 K2-2

- newly integrated technology can lead to powder savings due to excellent transfer efficiency, easily penetrating corners.
- our Anti-static powder hose is developed with new technology and it can prevent risk of fire by removing sparks or electrical arcs.
- Prevents accidents caused by electrostatic shocks to the worker.
- The new technology of the one touch button installed in the gun enables you to clean inside of the gun and powder hose easily and quickly.

K2-3

K2-4

K2-5

K1 powder coating machine for high quality powder coating

K1-1

Applicable to a large number of coating job with powder 50L

K1-2

Vibration manual spray system for FAST COLOR CHANGES

K1-3

K1-4

K1-5

Electrostatic Flocking Machine

COLO-F-668

Electrostatic flocking machine uses a high voltage gun with electrode which will charge the orient fibers with electricity, thus fibers are effectively attracted to the adhesive substrates as they exit from the nozzle. The flocking fibers usually are nylon, rayon or polyester of different colors and measures, forming a protection or decoration coverage.

Portable Electrostatic Flocking Machine

Jewelry Box

Lantern

Plush toys

Wallpaper

Powder Coating Gun

COLO-08

Remote control offers flexibility during application

New nozzle concept for perfect coating

Ergonomic handle provides the perfect grip

Quick release coupling for fast and effi cient color changes

COLO-08 POWDER PUMP

new design powder injector,
make the powder transfer more smooth.

COLO-08 powder gun parts & accessories

Spare Parts Replacement

digital stepmotor

COLO-9008
COLO-9008-1

Solenoid Valve for 191S

COLO-9005-3

electrically conductive carbon strip powder hose

600204-10
600204-11
600204-12

powder hose 600203

COLO-9002

COLO-9003

COLO-9004

COLO-9005

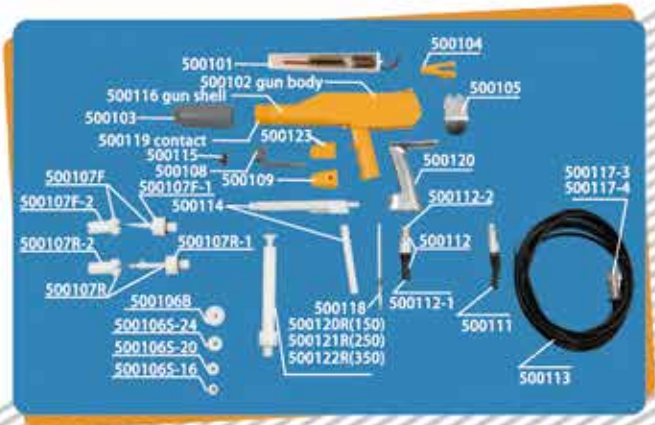

Powder gun

PCB-191S

PCB-800D

PCB

Cascade

Powder Hopper

COLO 52A | COLO 52B | COLO MINI01 | COLO MINI02 | COLO MINI03 | COLO MINI B

COLO 62A | COLO 62B | COLO 62C | COLO 30B/44B

COLO 40A | COLO 40B | COLO 40C | COLO 40D

COLO R01 | COLO S01/S02 | Spare Parts | COLO-55A

CG Spare Parts Replacement

NON OEM part compatible with certain GEMA products

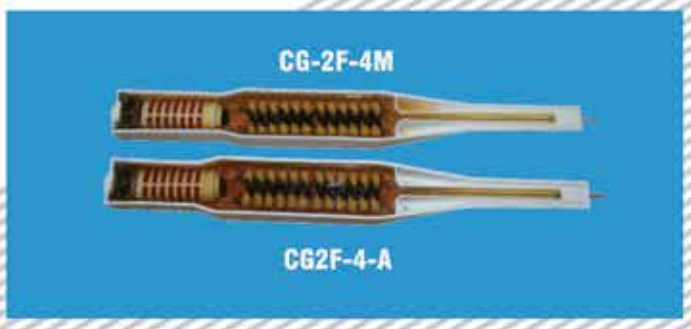

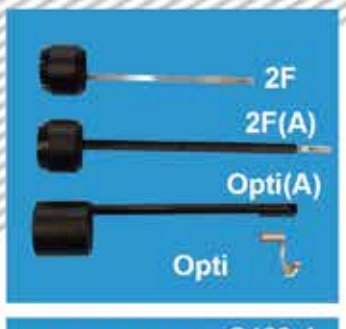

CG Spare Parts Replacement

NON OEM part compatible with certain GEMA products

CW Spare Parts Replacement

NON OEM part compatible with certain wagner products

CX1 Spare Parts Replacement

NON OEM part compatible with certain wagner products

CN Spare Parts Replacement

NON OEM part compatible with certain Nordson products

CN Spare Parts Replacement

NON OEM part compatible with certain Nordson products

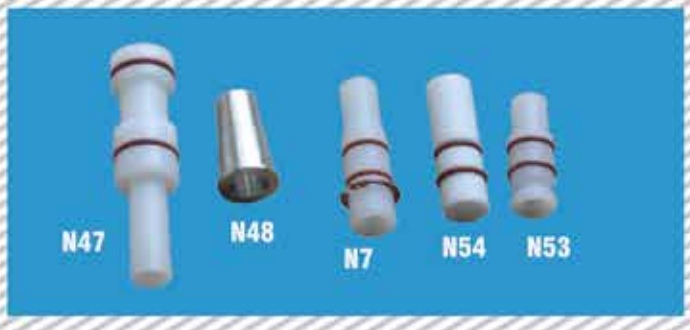

CK Spare Parts Replacement

Spare Parts Replacement

Automatic Reciprocator

COLO-2000D

Frequency-adjustable reciprocator is specially designed for high quality powder coating, it can carry up to 2-12pcs spray guns and optional for wet painting guns as well.

Feature of the reciprocator:

- 80 storable programs
- Frequency: Japanese Mitsubishi

COLO-2200D

COLO-2200D Reciprcator is electrically driven by a frequency control motor via PLC, give gentle and precise motion, thus ensuring perfect coating result. it is wheeled for easy moving and fix, the slim column design allows for space saving arrangement of the guns.

Feature of the reciprocator:

- Could store 20 programs
- Easy operation
- Smooth and accurate running
- Solid and maintenance free
- Height or the stroke adjustable and customized

Technical Characteristics

Powe supply	AC 220V/110V 50HZ-60HZ	Stroke	1.5m/1.8m/2m/2.5m
Power of motor	0.75kw/1.1kw	Speed	0-0.8m/s(0-50m/min)
Speed	0~50m/min	Standard size	850*680*2970mm
Max load capacity	25 kgs	Weight	295kg

Automatic Reciprocator

The programmable two-dimensional and three-dimensional intelligent controllable reciprocator is specially designed to improve the working efficiency and coating quality. The equipment can meet the highest requirement of coating quality, as the ideal product for improving surface finishing coating design.

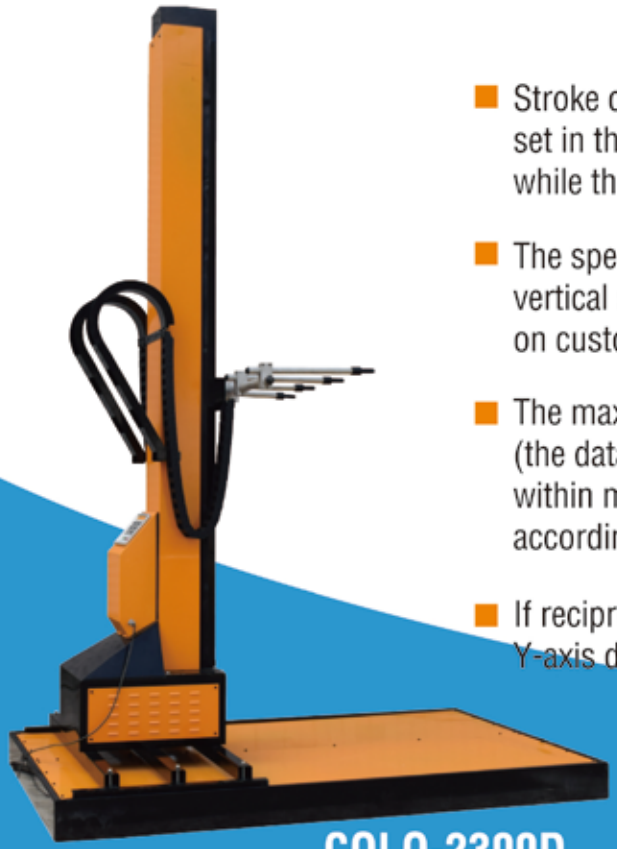

Features and Advantages

- Stroke can be adjusted in the controller; each part can be arbitrarily set in the travel range of the upper and lower limited position, while the speed can be set in a certain range.
- The speed of vertical direction in X-axis can be segment adjustable; vertical speed up to 78m/min(the data can be customized based on customer needs).
- The maximum speed of fore-and-aft direction in Z-axis is 10m/min (the data can be customized based on customer needs), adjustable within motion stroke range. there is a corresponding motion control according to the detection of part position signal.
- If reciprocator position changed, Z-axis direction would move to Y-axis direction (moving with the production line)

COLO-2300D

2Axes long stroke reciprocator

COLO-2500D

Horizontal reciprocator

Technical data

Standard stroke	1000-2000
Lifter loading	40kg
Speed range	0-1M/S (Variable frequency adjustable)
Voltage	220V AC±10%
Power	0.75KW 0.37KW
Up and down point delay	(Up and down point movement, adjustable)

Automatic Reciprocator

Smooth movements of guns for application of liquid paint or powder coating

Standard Versions	COLO-2600D
Total Height "H"	2590mm
Useful Stroke	1707mm
Distance From The Ground	898mm
Min speed	0.1m/min
Max Speed	16.8m/min
Total Weight	290kgs
Rated Power	1.5KW
Power Supply	110V/220V

COLO-2600D

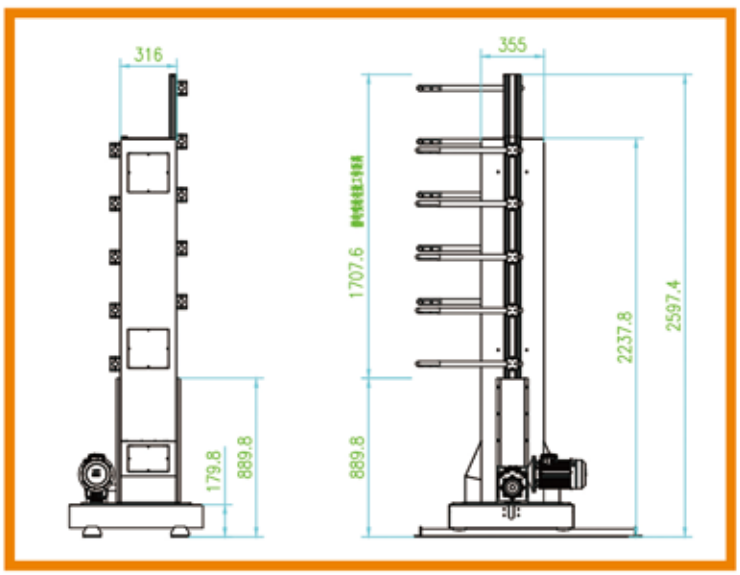

- Various Speeds and stroke length to suit conveyor height and production need
- Superior weight capacity (80kgs)
- Stroke Length: 300mm
- Stable mechanical construction ensures a stable powder cloud thus ensuring optimal coating results
- ATEX approved
- Reduces maintenance

NICE GUNS FOR COLOR CHANGES

Our highly efficient powder guns colo-08 are the heart of the powder coating plant.

They guarantee the best coating results and uniform powder deposition. Themanual gun OptiSelect excels by its outstanding ergonomics and the low weight.

The optimized design, the smooth material and the innovative nozzles make.

Colo-08 guns the best for color change .

- ★ Ideal internal design of the powder path
- ★ Optimized gun body design
- ★ High quality no -stick material, use of high quality no-stick materials
- ★ Prevents powder accumulations and short circuits tendency with metallic powders.

NICE GUNS FOR COLOR CHANGES

Easy maintenance, long lifetime

It's easy to keep your gun in perfect conditions for many years. All the components can be quickly dismantled and checked, without special tools.

Powerful and flexible for specialists

The COLO-191S allows you to create and store your own library of application programs, optimized for your parts and powder.

Control Cabinet COLO-5000-191S

The system can control reciprocator and auto powder coating system with central studio type(option).

COLO-191S-A-12P
(The control unit quantity can change according to the order)

- New control unit with commnication function
- Use one host to control multiple extensions
- PLC, touch screen and other devices use RS485 modbus protocol to communicate with the gun
- PLC, touch screen and other equipment control one powder gun host, and the remaining control extensions are controlled by this powder gun host

Central control system for multi automatic guns

- Featured with expandable and economic advantages
- Provide the gereral control function of main electricity and air
- Size can be custom-made, 2-12pcs control units avaiable
- Easy for operation and maintenance

COLO-PGC1A

COLO-800DA

COLO-660A

COLO-5000-PGC1

COLO-5000-800D

COLO-5000-660

COLO-668A

COLO-5000-668

Ultrasonic Powder Center

Integrated solution for all powder management needs your solution for efficient and space-saving powder management.

PLC controller

Ultrasonic Sieve

COLO-6200

The system is equipped with the powder pump and ultrasonic sieve guarantees the fastest powder output for reliable coating quality.

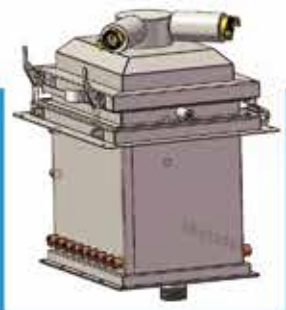

Power supply: AC 220V/110V 50Hz-60Hz (as required)

Nominal frequency: 38kHz

Powder hopper: 310*240*270mm

Sieve frame: 345*275*30mm

Standard mesh size: 80 mesh (on request)

Mesh size: 3-4kgs/min (depending on type of powder)

Power consumption: max 100W

Ambient: 5-40 ℃

Advantages of the Ultrasonic sieve

- Improved application efficiency
- Dissolving and loosening of powder accumulations
- Substantial powder savings
- Make workshop clean
- Controlled sieve frequency
- Different Mesh sizes available
- Ergonomic and easy access for cleaning the complete sieve
- ATEX certified

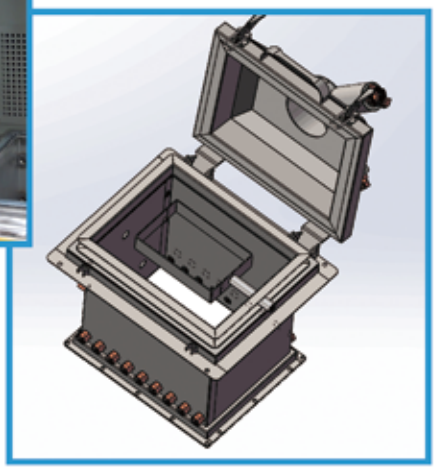

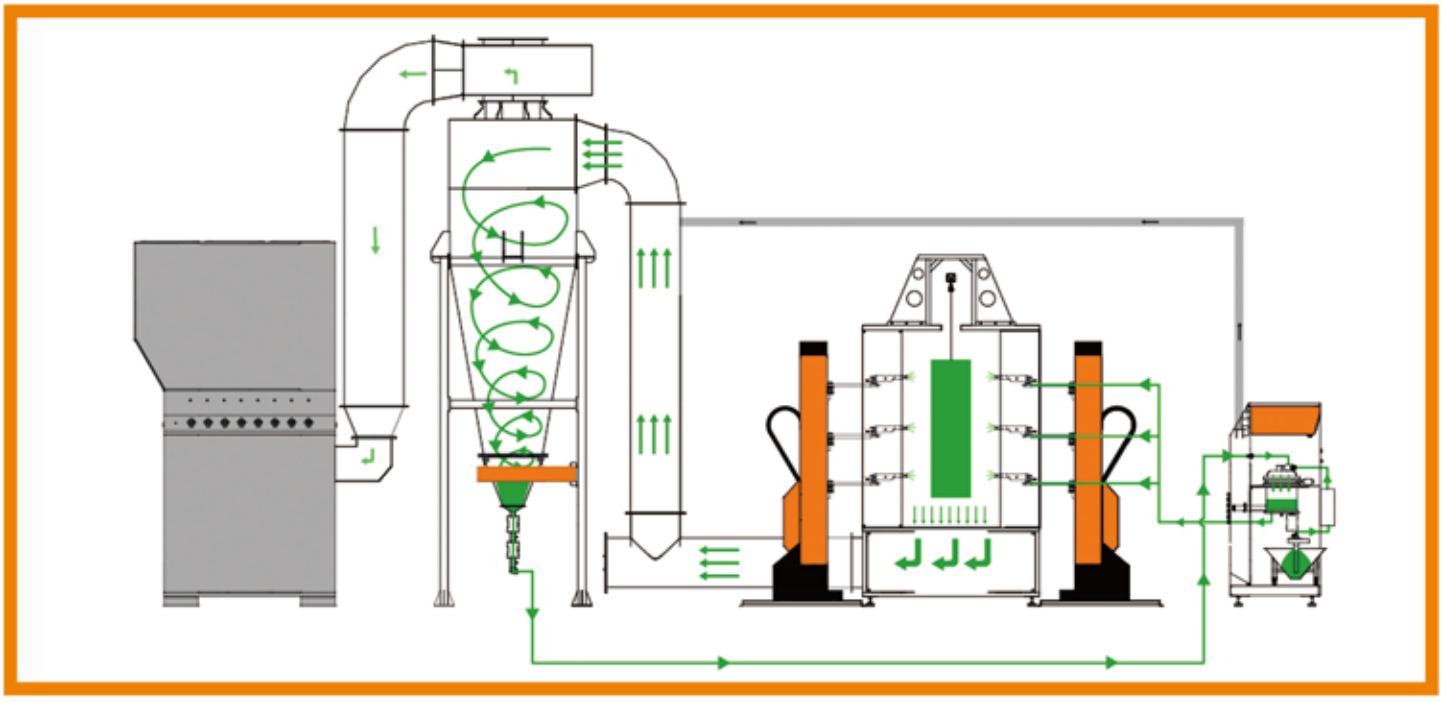

Excellent Coating Results

Quick Color Change

Compact Design

Easy Maintenance

PP05

Air pressure adjustment reference table

Fluid: 1-2bar

Vacuum		Vacuum	
Pressure (bar)	Length in (m)	Pressure (bar)	Length out (m)
2.0	0-1	2.0	0-3
3.0	1-2	3.0	3-8
4.0	2-5	4.0	8-16

Fature:

- High conveying efficiency, small powder air volume, no dust overflow
- Large powder conveying capacity, the conveying capacity can reach 6KG/Min
- With automatic cleaning function, color can be changed quickly
- Adapt to any existing equipment

Powder Feed Center COLO-6000

Powder center for fast color changes and improvement of productivity

The powder feed central system provides fast color change. The automatic spray gun, various powder hoses, and injectors will stay clean automatically during color change. A filter system maintains a comfortable indoor environment by transferring dusts during cleaning. The unit is fully programable.

The powder position sensor will detect the position of the powder. A lack of powder will signal a warning which will fluidized the powder barrel: 100 liter capacity. The cover extends the capacity and will prevent the powder from wafting.

Shake table: If you do not use the fluidized powder box, the powder can also be placed directly in the original packing carton shock stage. From there the powder can be pumped directly from the carton supply to the powder gun. It does not require cleaning when changing the powder coating box.

The automatic sifter contains a screen which removes impurities contained in the recovered powder.

Control System: Touch screen operator panel and keyboard input Increase the supply of new powder automatically. Automatic matching of old and new powders together.

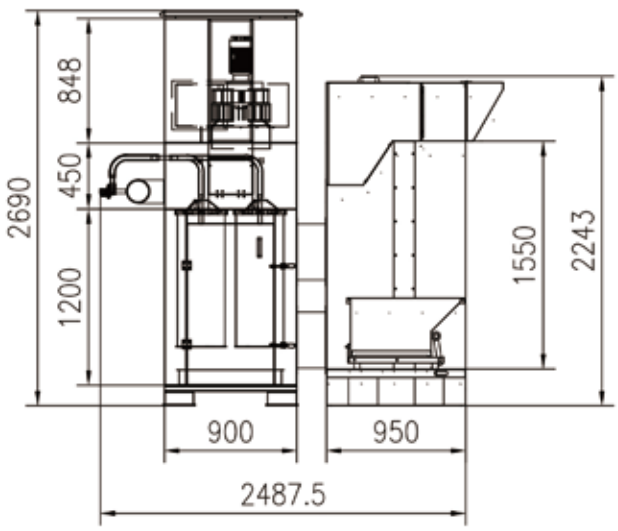

TECHNICAL PARAMETERS

1. Pwer supply voltage: 1P 220VAC (110V)
2. Power: 500W
3. Air pressure: 0.6-0.8MP
4 Can be equipped with up to 16 powder pump

Gap Controller-Work Pieces Sensor

Ensures that spraying only occurs when there is a work piece in front of the gun. The powder feed is switched off in the gaps. To reduce the over spray.

optical sensor

The outline of the work piece is scanned by means of light barriers or by light strips by light strips

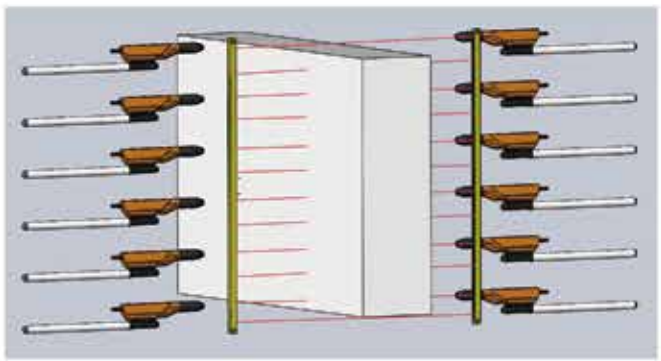

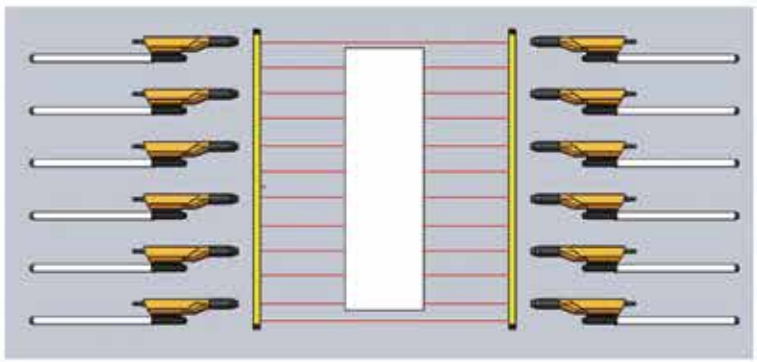

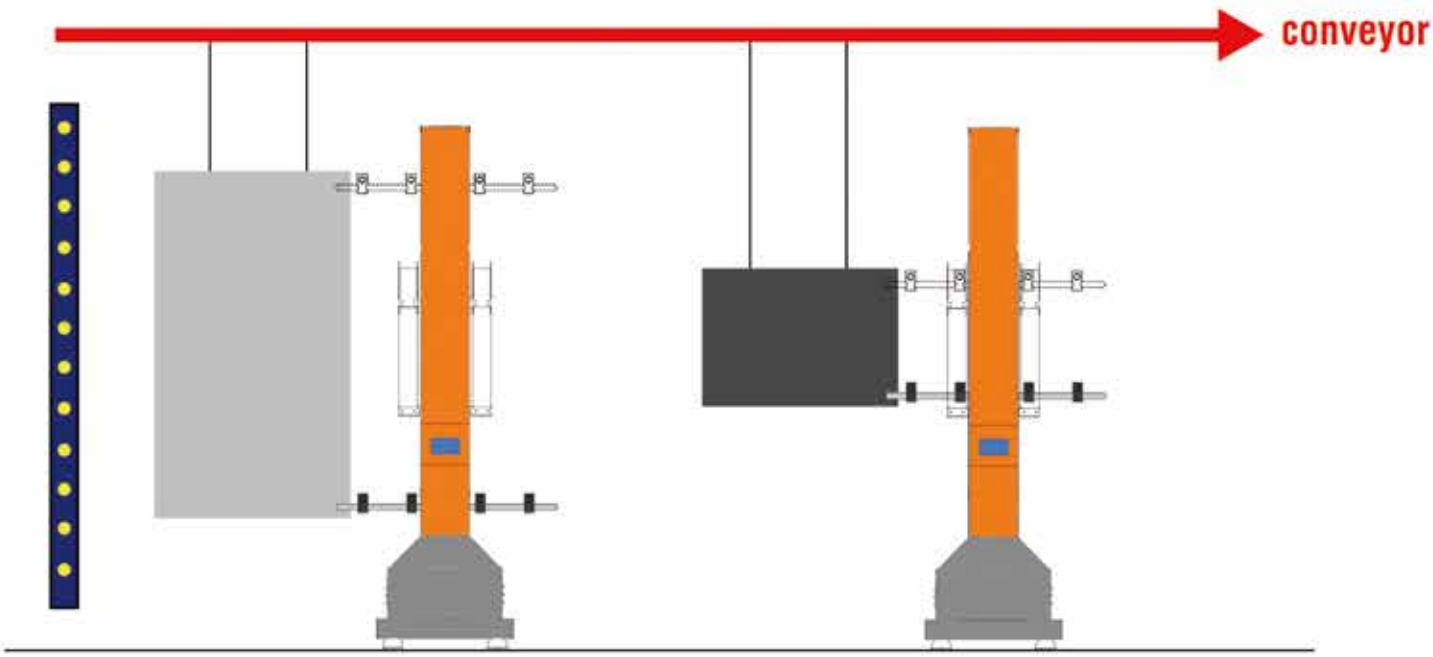

Applications:

All kinds of automatic powder coating applications.

Powder Recovery Unit

Powder Sieve Machine

COLO-3000-S

COLO-3000-R

COLO-4000

COLO-34-01

COLO-34-02

COLO-3000

Powder coating recovery equipment for recycle the powder coatings with the capacity of 80kgs-100kgs used in the automatic powder coating lines. Import motor ensure the lifetime.

COLO-4000

To semi- Automatic recycling the powder lost in the process of electrostatic powder coating on metallic workpieces.

Powder Coating Booth

Small Portable wheel powder coating spray booth filters

This Small powder coating spray booth is designed for wheel coating work. with one powder coating filter which can recovery the powder, with one powder collector cabin, which can collect the powder.

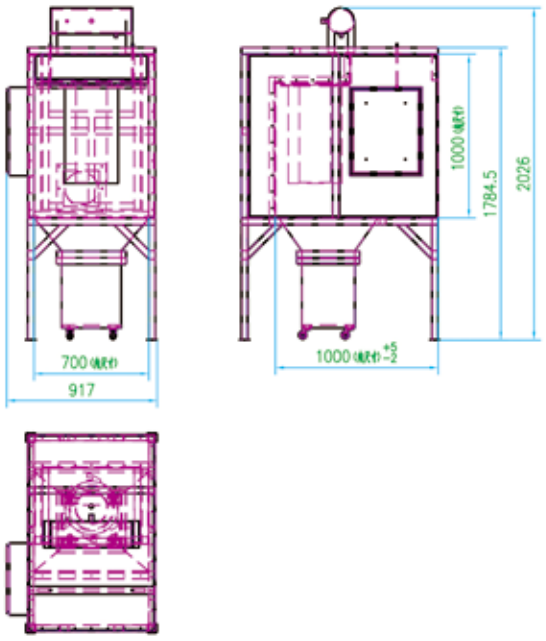

COLO-S-0711

Model:	COLO-S-0711
Booth Type:	close
Operator dimensions:	700W x 1000 H x 1000 D
Overall dimensions:	917W x 2026H x 1220 D
Weight:	200kg
Power supply:	Electric
Nominal power:	1.5kW
Voltage:	380V
Frequency:	50-60Hz
Filters:	Polyester
Filters count:	1, filter size 325*600
Filters hang type:	easy for change
Filter cleaning system:	Pneumatic

Powder Coating Booth

Value • Flexibility • Performance

COLO-S-1115

Application:

- This powder spray booth is an economical solution for basic powder coating operations, with filter powder collecting system.
- For job shops, first-time powder coating and to assist large in-house powder coating operations, this powder spray booths offer a variety of configuration options.

Feature :

- Economic, Easy Operation, good for small work piece
- Durable, long-life powder-coated steel structure with high-quality galvanized canopy and floor
- Requires only quick, easy connect electrical and pneumatic to start production

TECHNICAL DATA:

Model	COLO-S-1115	Voltage	380V
Booth Type	Closed	Frequency	50-60Hz
Operator dimensions	1000x1500x1000(W*H*D)mm	Filters	Polyester
Overall dimensions	1200x2000x1500(W*H*D)mm	Filters count	2
Weight	200kg	Filters hang type	easy for change
Power supply	Electric	Filter cleaning system	Pneumatic
Nominal power	1.5kWt	Warranty	12 months

Powder Coating Booth

The manual coating booth COLO-S series are ideal for small batches and highest quality.

Value • Flexibility • Performance

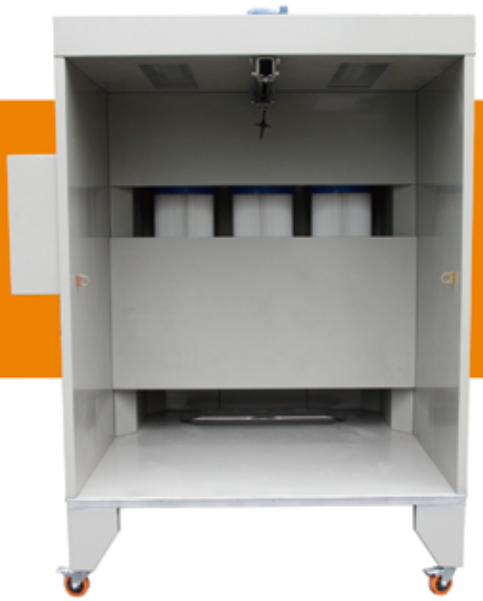

COLO-S-1517

COLO-S-2315

100% Polyester filters, quick-release type

simple PLC control unit

THE ADVANTAGES OF THE COLO-S BOOTH:

- Powder coated steel booth, moveable
- Delivered ready for connection
- Integrated Illumination
- Mobile powder collecting hopper
- Simplified filter cartridge for changing
- Supervision of minimal exhaust air volume

Technical Data	COLO-S-1517	COLO-S-2315
No.of filter elements	3	4
Extraction volume	4000 m3/h	6600 m3/h
Fan power, effective	2.2kw	4.0kw
Voltage/Frequence	3 phases 380V/50HZ (or as request)	
Compressed air consumption	15 m3/h/6bar input pressure	
Weight (approx.)	480kgs	580kgs

Booth dimensions

Width	1500(1580) mm	2300(2550) mm
Depth	1000(2000) mm	1500(2100) mm
Height	1700(/2150) mm	1500(2240) mm

Tunnel Powder Coating Booth

The coating booth is designed for the double-sided automatic or manual coating with a conveyor system.

Parts enter the booth through the conveyor openings, then pass the coating operator stations to receive the coating. The powder overspray is entrained within the air stream moving to the collector module, where the cartridge filters will re - move the particulate. The containment air is drawn through the air handler's primary and final filter system before being discharged back into the room. Coated parts exit the booth for conveyance to the cure oven.

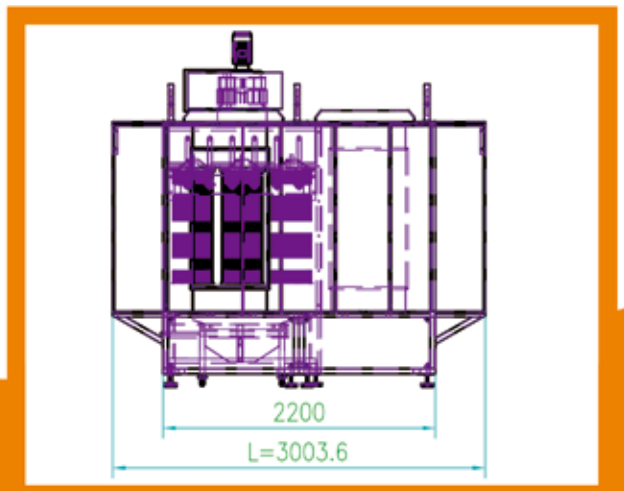

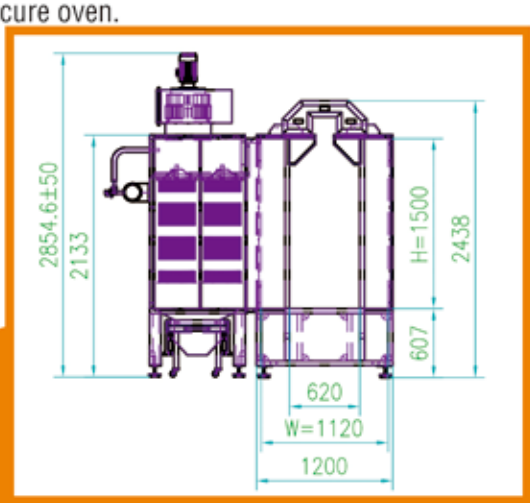

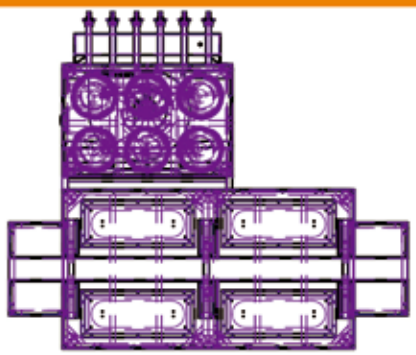

COLO-S-3212

Operator dimensions
620width x 1500 height x3000 depth
Overall dimensions 1200width x 2289 height x 3000 depth
Weight900kg
Power supply Electric
Nominal power 5.5kW
Voltage 380V(can be different as request)
Frequency 50-60Hz
Filters Polyester
Filters count 6
Filters hang type easy for change
Filter cleaning system Pneumatic
Warranty 12 months

Walk in Powder Coating Booth

Walk-in Booths

Walk in Booths (also called Cabin Booths) are ideal when coating large and bulky or heavy parts.

As the name suggests, after the part to be coated has been rolled into the cabin, the operator walks in and coats the parts from all sides.

These parts are then rolled out directly into the powder curing oven.

These booths find use in batch system for control panels, cabinet, large iron cast products, etc.

Walk in Booths also could have mono Cyclones as a recovery system.

COLO-S-3222

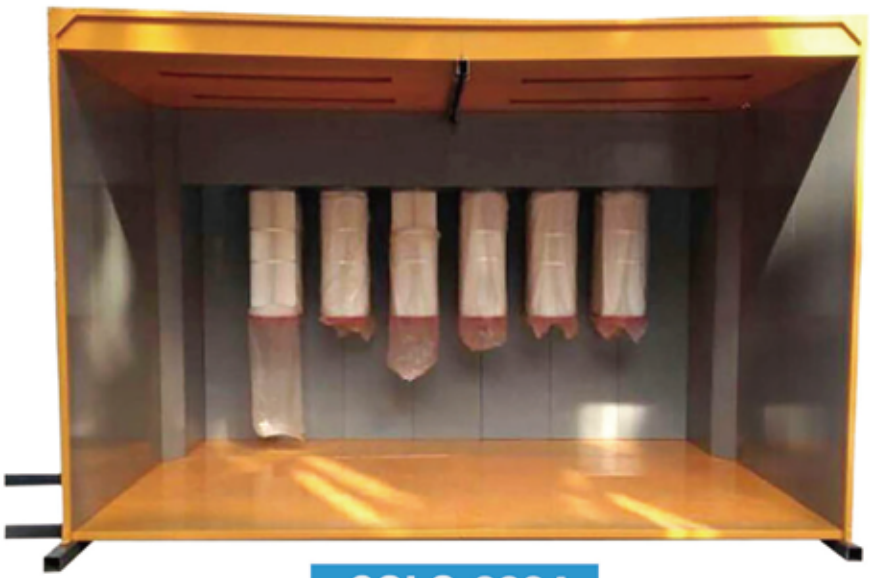

COLO-3924

Model	COLO-S-3222	COLO-3924	COLO-3217
Working dimensions	W2300 *H1850 *D1500mm	W3900 *H2400*D2400mm	W3000 *H2000*D1700mm
Overall dimensions	W2504 *H2169*D2002mm	W4013 *H3347*D2713mm	W3203 *H2168*D2200mm
Filters count	4 pcs.	12 pcs.	5 pcs.
Nominal power	4kw	5.5kw	4kw
Nominal voltage	As required	As required	As required
Air consumption	4000m3/h	8000m3/h	4000m3/h

Tunnel Powder Coating Booth

Value • Flexibility • Performance

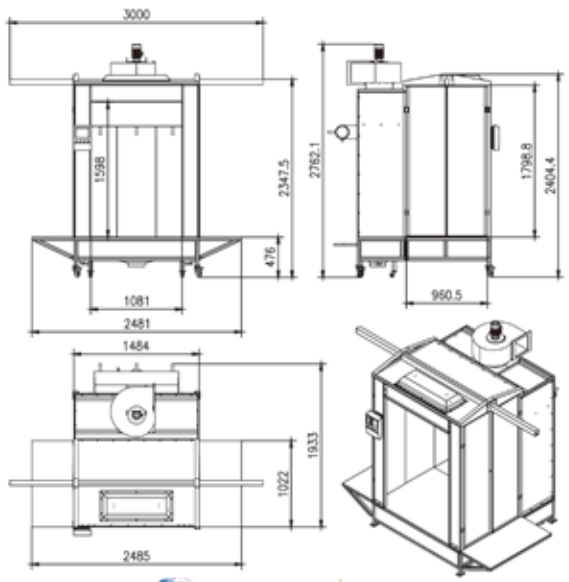

Tunnel Booths

- This booth is having side doors & article holding track entry & exit is from side through doors.
- By this way material handling is systematic i.e. from one side entry, coating & then exit from other side.
- If for spraying two side, could make 2 operation doors.
- In exceptional case, if article is very long then a door can be kept open & coating is done step by step by moving article slowly.
- In this case recovery will be reduced.

COLO-S-2152

Model:COLO-S-2152

Booth Type	Closed-drive-thru	**Frequency**	50-60Hz
Operator dimensions	1400*1800*1000(W*H*D)	**Filters**	Polyester
Overall dimensions	2500*2300*1500(W*H*D)	**Filters count**	3
Weight	450kg	**Filters hang type**	easy for change
Power supply	Electric	**Filter cleaning system**	Pneumatic
Nominal power	2.2kW	**Air consumption**	10,200m3/h
Voltage	380V	**Warranty**	12 months

Mono-Cyclone Powder Coating Booth

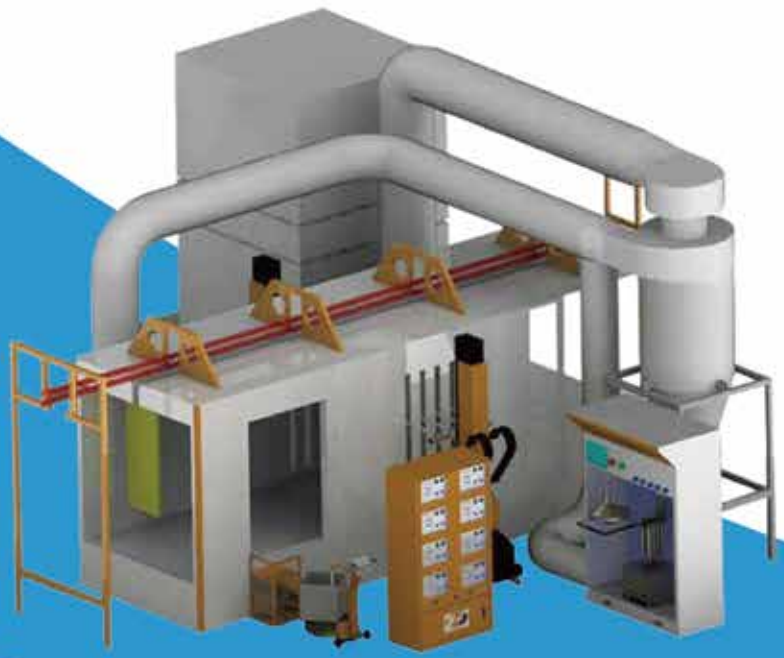

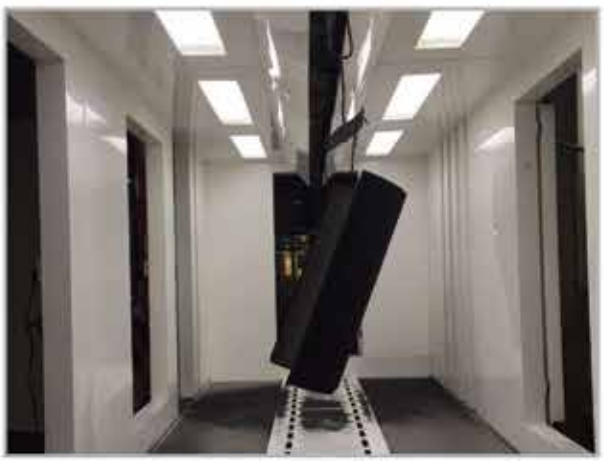

Cyclone bottom cone bucket can be quickly separated from the barrel for easy cleaning.

Mono-cyclone fast color change powder coating booth

The bottom of spray booth equipped with an automatic device and automatically air knife keep the bottom always no powders stay.

MONO-CYCLONE SEPARATOR

- Mono-cyclone single-tube structure makes clean up shorter color change.
- Mono-cyclone separation rate of up to 98%.
- Disc Cone bucket and cylinder junction of he filter shaking motor efficiency vibration screening.
- Removable disk cleanup filter with change.
- Bevel the bottom of the bucket can be configured to work in alternate double balloon valve.
- Bevel the bottom of the bucket can be configured to pump fluidized powder + powder pump delivery forms.
- Exhaust pipe at the bottom end face of the circular cover plate can be quickly disassembled for cleaning.

Plastic Powder Coating Booth

Plastic powder coating booth for fast color changes !

Comparing with the metal spray booth, the PVC powder coating booth has obvious technical advantages;

- In the high-voltage electrostatic field, inner wall of PVC booth brings the charge with the same polarity as the powder particles, making the inner wall's rebound effect on the powder particles because of homogeneous repulsion, so that more powder can gather to the workpiece, which effectively improve the spraying efficiency.
- Less powder adsorption to the inner wall makes less powder go through the powder coating equipment, achieving high powder utilization to save powder.
- High efficiency of the bottom exhaust, matching with the discharge device of "large-diameter double-whirlwind powder separator + terminal filter", makes the least powder accumulation and the most environmental-friendly emission.
- Air compressed gun can easily blow off the powder that has attached to the booth wall, helpful to rapid cleaning.
- According to the production requirment, you can choose appropriate type of automatic powder coating control center to improve the main task of spraying, to save time and energy.
- Variable frequency stepless speed regulation reciprocator can carry automatic spray gun perfectly, and complete the spraying task successfully.
- Optional powder self-recycling feed center ensures maximum utilization of powder and least waste, so you don't need to worry about the automatic powder recovery, filtering and powder return to the powder hopper

Fast Color Change Powder Coating Booth

OPTIONAL

A variety of bottom recycling methods are available for customers to choose from, suitable for all types of workpieces.

A

B

C

D

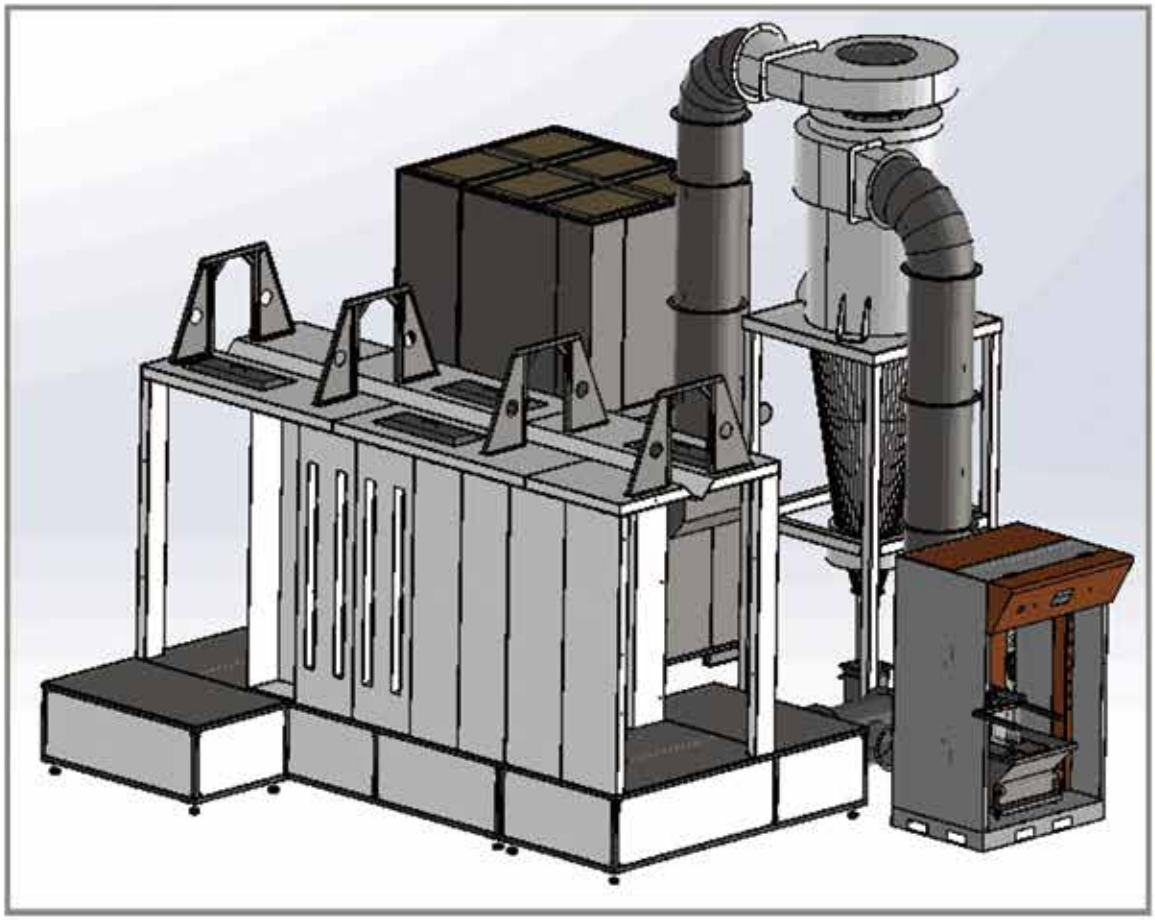

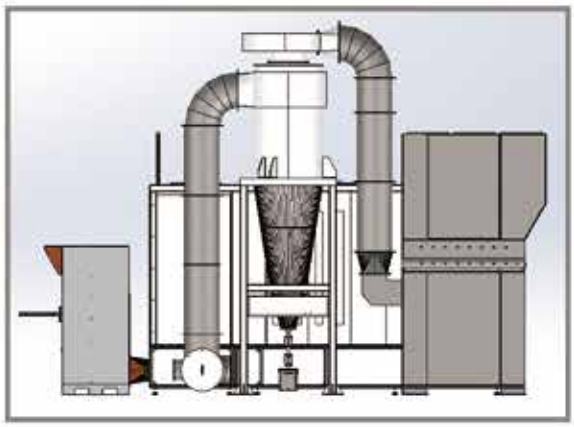

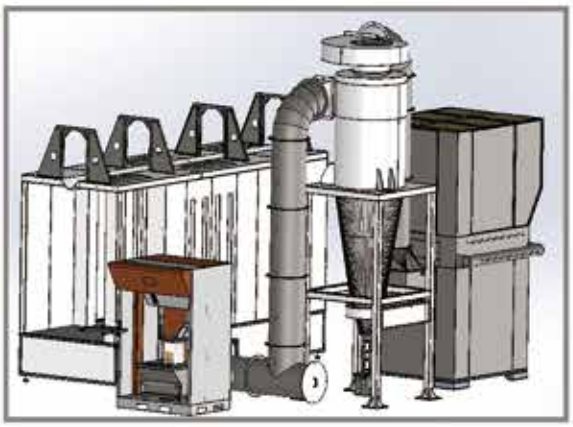

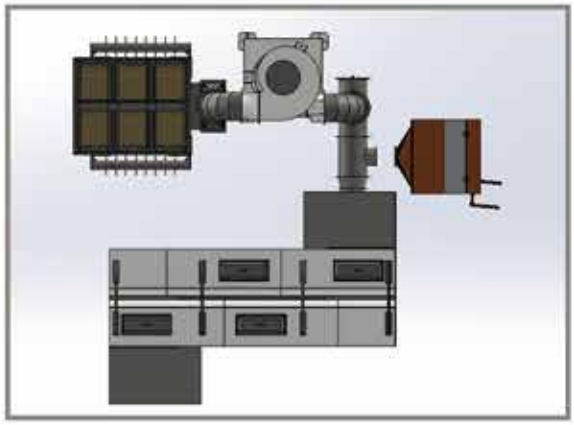

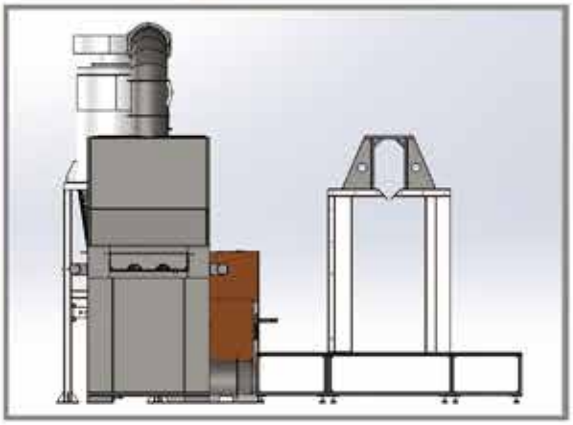

Multi- cyclone Powder Coating Booth

Multi-cyclone +Post filters recovery system-for easy mobility and faster clean up operation

Multi Recovery System

- Multi-pipe type small cyclone make the contact area of powder sepeparation more.
- Molding guide vanes make ventilation more stable uniform volume and the bottom of the powder hopper quickly removed and the side access windows make clean up easier.
- Compact structure, small size, not require so many in the space for workshop.
- You can choose to configure multiple small cyclone unit performed easily and quickly change color.

After filter system

- Multiple filters make filtering area enough.
- The efficiency of filter is up to 99%.
- The precision of filer can reach 2-5 microns.
- Advanced rotary wing filter for cleaning system.
- Automatic pulse-type counter blowing cleaning control models make the operation condition of the filter better and longer life time.
- Air package to ensure that the air flow and air pressure toclean up when you make a more thorough clean-up.
- Several side access window clean-up easier.
- Top-mounted exhaust fan with ventilation so that the form of least resistance.
- Top fan room side panel can be removed to facilitate later maintenance.

Model	COLO-S-Multicyclone
6	5100-8100m3/h
9	7650-12150m3/h
12	10200-16200m3/h
16	13600-21600m3/h

Filter Powder Coating Booth

Single grade filter element powder recycle powder coating booth

- The economic and widely used powder recycle system
- Powder recycle rate it is about 98-99%
- Only suit for simple coating (2-5 colors)
- Simple and reasonable structure, easy to maintenance

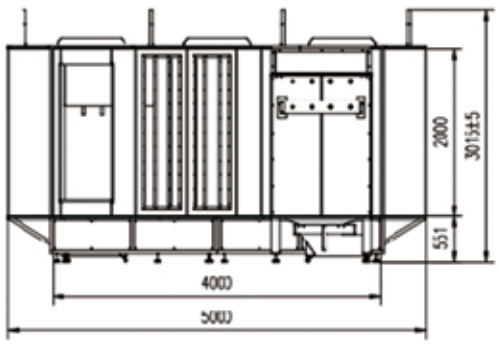

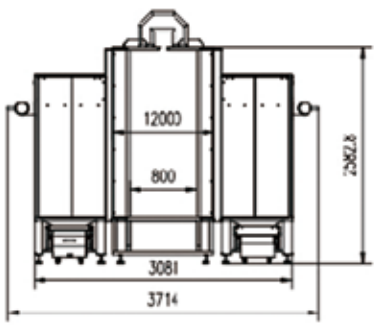

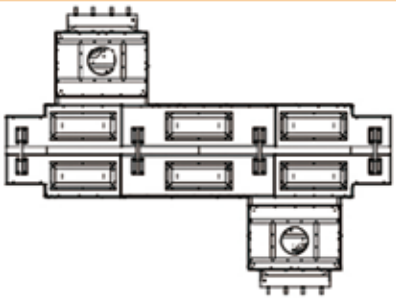

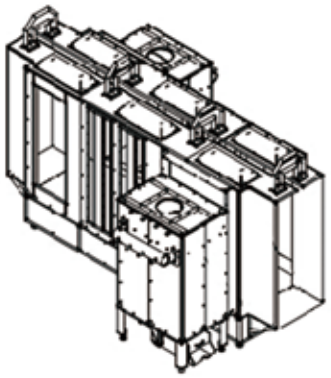

Model	COLO-S-Basic Type (COLO-S-0825)
Booth Type	filter type
Operator dimensions	800width x 2000 height x 4000 depth
Overall dimensions	1200width x 2582 height x5000 depth
Weight	1100kgs
Power supply	Electric
Nominal power	2*5.5kw
Voltage	380V
Frequency	50-60Hz
Filters	Polyester
Filters count	12
Filters hang type	easy for change
Filter cleaning system	Pneumatic
Warranty	12 months
Material	Stainless steel 304

COLO-S-0825 www.colourspray.com

Powder Recovery System

Cartridge Filter Dust Collector for Powder Coating

Model:	COLO-S-Filter system
Booth Type:	Filter type
Weight:	500kg
Power supply:	Electric
Nominal power:	15HP
Voltage:	220-415V
Frequency:	50-60Hz
Filters:	Polyester
Filters count:	12
Filters hang type:	Easy for change
Filter cleaning system:	Pneumatic
Material:	Steel (powder coated)

Product Description

- Filter recovery spray booth is the most efficient powder separation system
- Suitable for all applications where a few standard colours are used
- The complete filter unit can be replaced making fast colour changed possible
- Almost 100% powder separation for greater economy
- The size could make according to different size part.
- With 3pcs plate type filters on the top of the booth for filter the powder again
- The flow of the fan motor could adjust according to different powder
- PLC controller
- With 12pcs filters, Filtration accuracy is less than 1 micron.

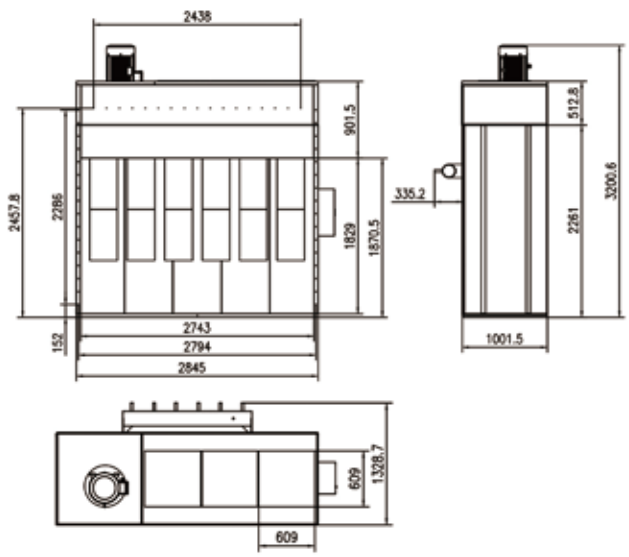

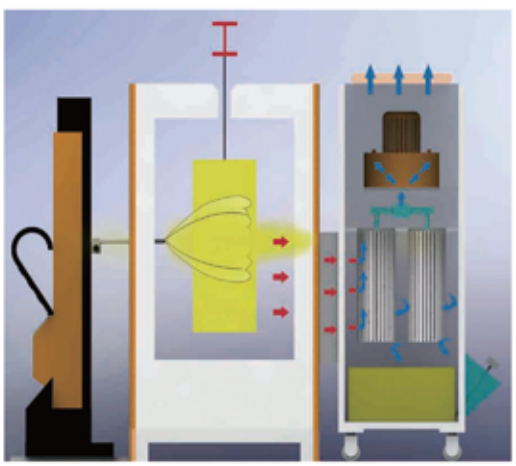

Final Stage Filter

Dust air from a powder coating booth is best captured by two-stage filtration. This system works by removing 99% of the dust to allow super-clean air to be recirculated back into the workshop. There is no need to duct this air from the workshop, There is no need to cut ano -ther hole in the shop's roof. The final stage filter unit is not designed for use with paint or other wet-spray processes.

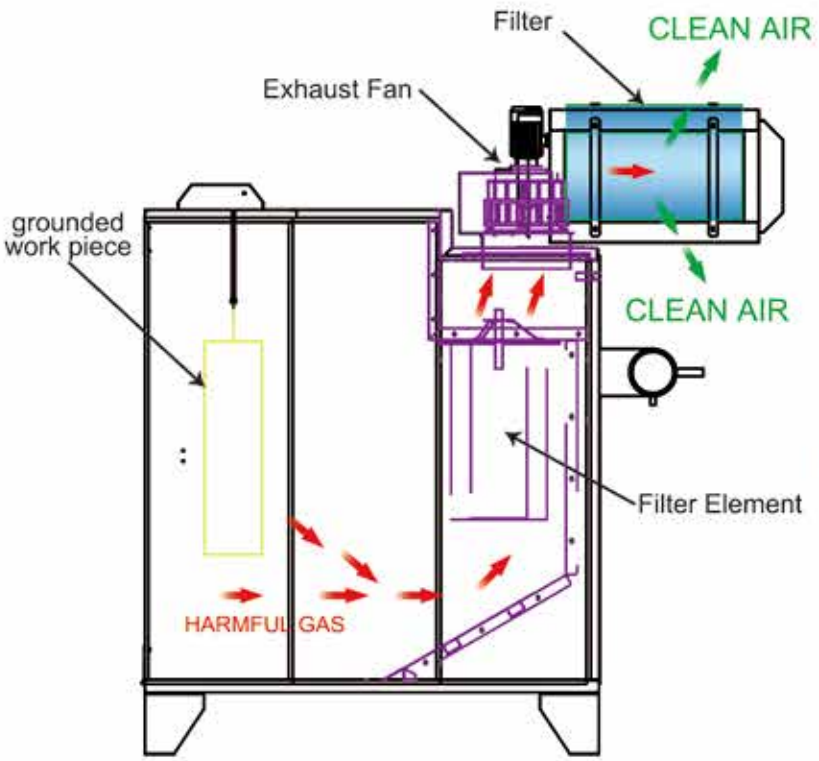

Applications

Accessories

Rotary wing

Fan motor

Spraying zozzle

Cartriage filter

100% polyester, common or imported materials can be supplied as request

COLO-600-1

COLO-600-2

COLO-600-3

COLO-900-1

Common type filter available sizes:

325*215*600mm
320*220*600mm
325*215*900mm
320*220*900mm

Powder sieve equipment

Quick-release type filter available sizes

325*215*600mm
325*215*900mm
325*215*1200mm

Powder Coating Oven

Electric Powder Coating Curing / Drying Oven

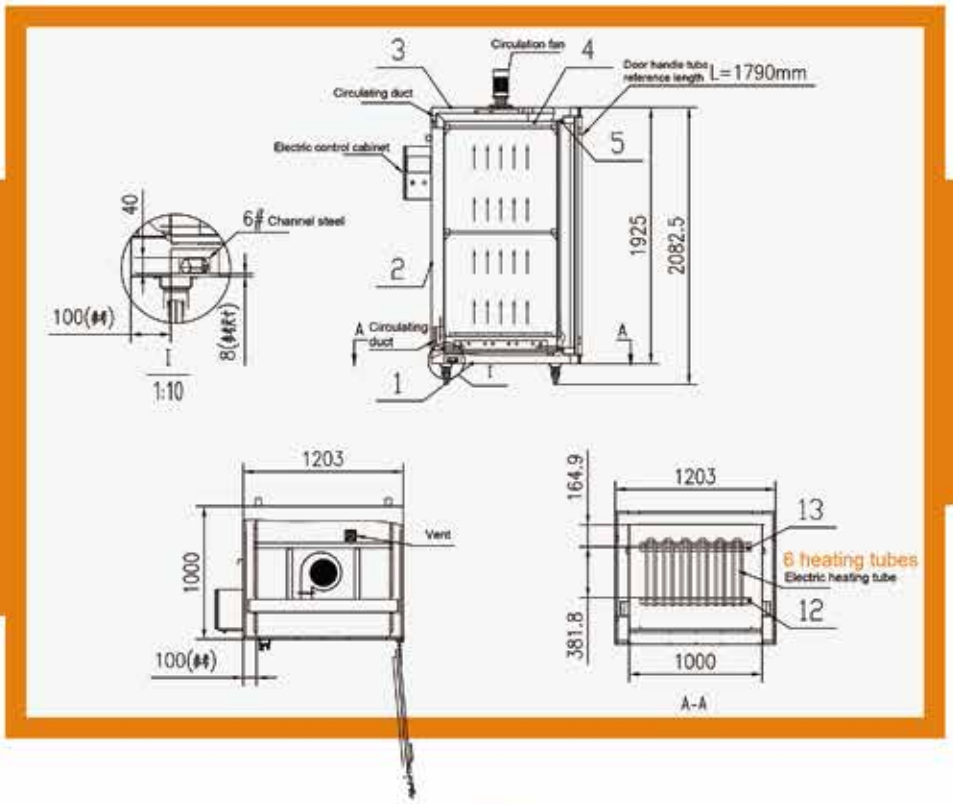

Great for wheels, composite parts, metalwork and bike frames

The colo-1688 Powder Coating Curing Oven is used in the product process of powder curing.
With 2 shelves and 5 rails per shelf, there's plenty of space for hanging powder coated metal work to dry.
This product will need to be hardwired or wired onto a 32AMP plug.

Product features:

2 shelves each with 5 removable rails
Portable with 4 wheels included
Voltage: 3 phases 380V (as required)
Power: 6.5kW
Insulation Plate: 10cm
Warm Up Time: 25-30 minutes (180°C)
Temperature Stability: < ±1°C
Temperature Range: 0-250°C
Dimensions: H1600mm*W1000mm*D845mm

COLO-1688

Powder Coating Oven

High efficiency electric powder curing oven

- Full automatic control PLC contro
- The heating by electric
- Heating temperature:160-250 degree
- Widely applicated for the medium metal parts as cylinder, car rim, motorcycle parts or MDF board

Model	COLO-1732
Work size	W1650*D3000*H1700mm
Motor	1.5KW
Heating type	Electric

COLO-1732

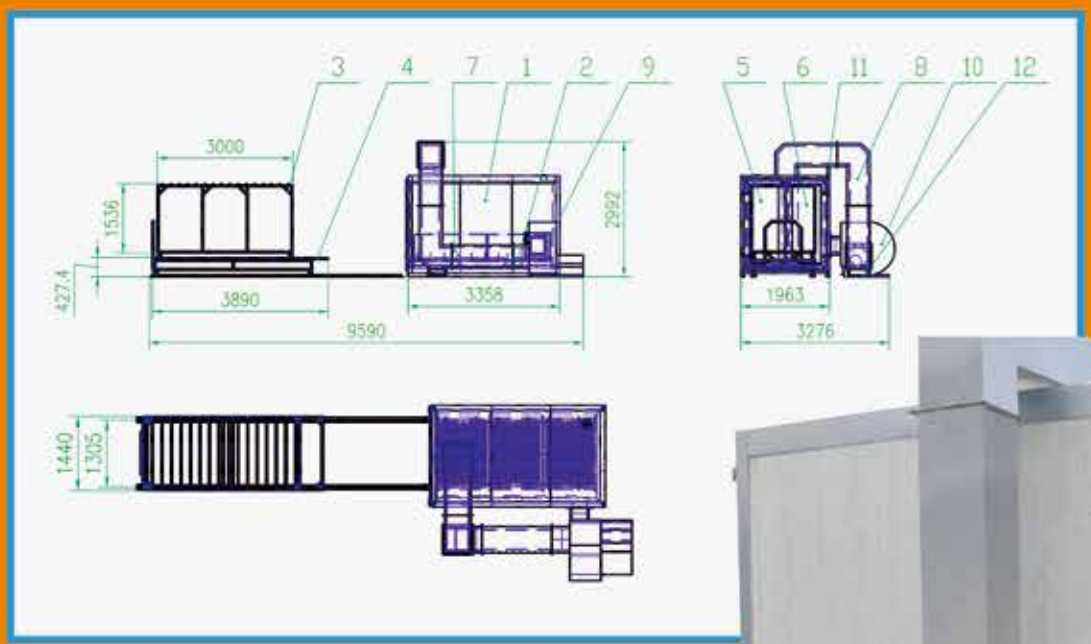

Gas Burner Powder Curing Oven

COLO-5219 GAS or LPG oven is suitable for large volume powder coating works with limited working space and the Gas or LPG resource rich city(means the gas and LPG will be cheaper than electric).

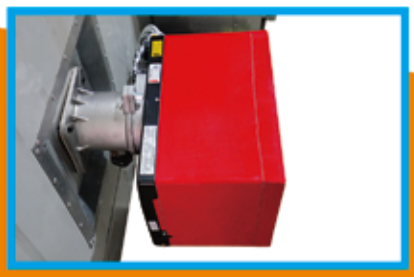

COLO-5219

Features of Gas or LPG Curing Oven

Model	Colo-5219
Worksize dimensions	1800W x 1900 H x 5000D
Overall dimensions	2000W x 2500H x 5600 D
Power supply	GAS / LPG / 5.5kw
Voltage/Frequency	380V/220v(50-60hz)
Warm-up time	15-30 min. (180° C)
Temperature stability	< ± 3-5°C
Temperature max.	250° C
Circulation/ Air flow	Vertical, Variable through holes on the walls
Transportation	Trolley

- Precise temperature control, furnace tolerance of +/-5 degrees Celsius. Indirect heating system with a heat exchanger.
- Hot air is transferred from the bottom up.
- Heat exchangers used in seamless steel tubes 8*8 array, use the combustion liner 314S stainless steel seamless pipe thickness of 3-4mm.
- Closed-round clean efficient circulation system
- High quality Italy imported burner

Powder Coating Oven

Electric powder coating oven

COLO-1515

Thick insulation 100-150mm

COLO-1864

Forced Air

Forced air circulation with booth walls and floor, curing a very good temperature uniformity result

Automatic controls-simple PLC system

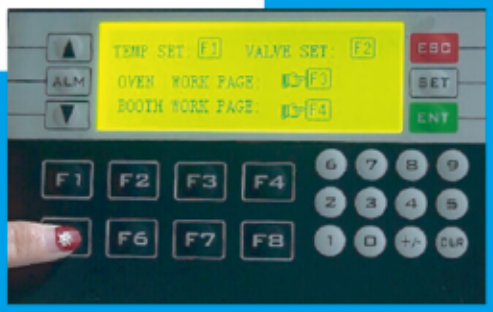

Control provides high precision heating process, it offers all the features you need. The LED display allows you to set the temperature, as well as the duration of heating process at the desired temperature.

Model	worksize dimensions (mm)	External dimensions (mm)	Fans amount	Heating power	Nominal voltage	Motor power
COLO-1688	W1000 H1600 D845	W1045 H2083 D1000	1pc	9kw	As required	0.55kw
COLO-1515	W1500 H1500 D1500	W1800 H1600 D1930	1pc	18kw	As required	0.75kw
COLO-1864	W1600 H1800 D1400	W1900 H2200 D1700	1pc	18kw	As required	0.75kw
COLO-1732	W1650 H1700 D3200	W1950 H2100 D3500	1pc	54kw	As required	4kw

Powder Coating Oven With Overhead Conveyor

COLO-2447

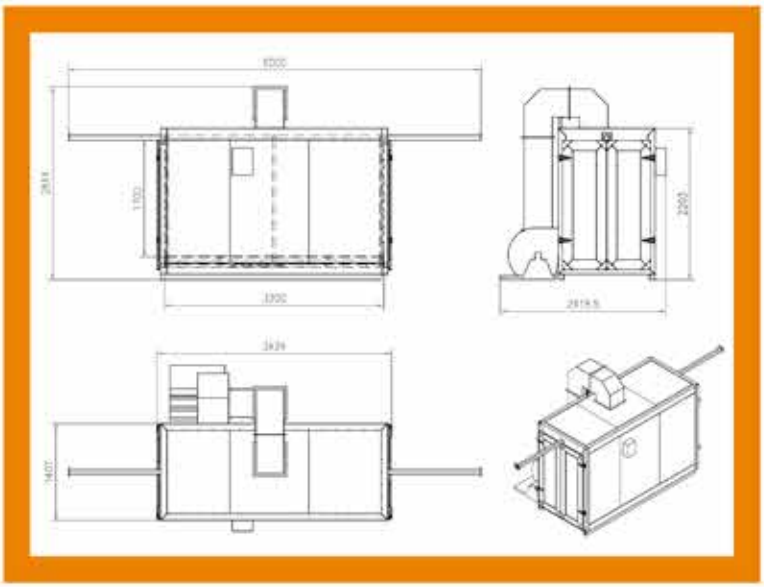

Worksize dimensions	W1200*H1700*D3200(mm)	**Temperature max**	250℃
Overall dimensions	W1407*H2203*D3424(mm)	**Ventilation performance**	805-1677m3/h
Power supply	Electric/ 40kw	**Fan motor power**	2.2kw
Voltage/Frequency	As required	**Circulation/ Air flow**	Vertical Variable through holes on the walls
Warm-up time	15-30 min(180℃)	**Transportation**	Trolley on top
Temperature stability	＜±3-5℃	**Warranty**	12 months

Powder Coating Oven

Gas / LPG /Diesel fired powder coating oven

Industrial curing batch oven.
front and back door, heat Source: LPG

Gas or Diesel as requested
Colo-0813

(W800mm x H1500mm x D3000mm)

- Precise temperature control, furnace tolerance of +/- 5 degrees Celsius. Indirect heating system with a heat exchanger.
- Hot air is transferred from the bottom up.
- Heat exchangers used in seamless steel tubes 8x8 array, use the combustion liner 310S stainless steel seamless pipe thickness of 3-4mm.
- Closed-round clean efficient heat circulation system.

Gas / diesel / LPG fired powder coating oven

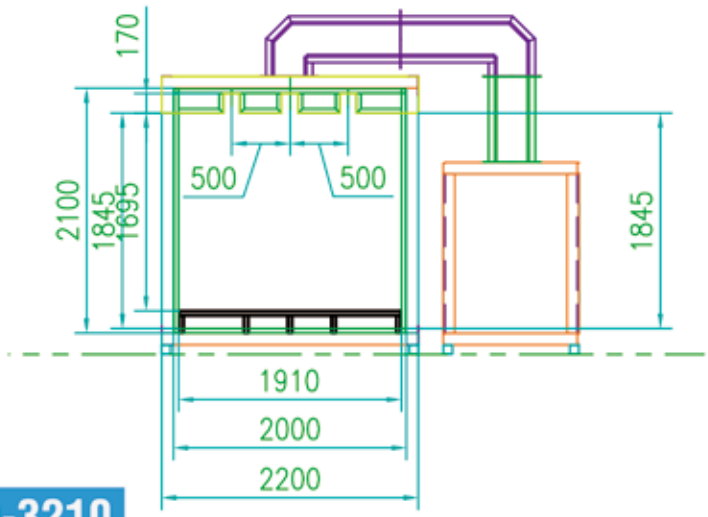

COLO-3210

Burner can be put in the side or top place

trolley designed as request

Exported into worldwide

Italy imported burner

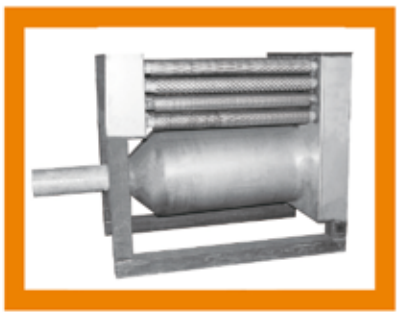

exchange heater

burner

motor

Model	Worksize dimensions W • H • D mm	Fans amount	Burner power	Heating power	Nominal voltage	motor power
Colo-0813	W800 H1500 D3000	1 pcs.	100,000cal	380V/220	380V/220	3kW
Colo-1732	W1650 H1700 D3200	1 pcs.	10,0000cal	380V/220	380V/220	4kW
Colo-3210	W2000 H1900 D3100	1 pcs.	10,0000cal	380V/220	380V/220	4KW

300℃/500℃ High Temperature Industrial Curing Oven

300℃ or 500℃ curing ovens are now more and more required in painting industrial, these high temperature ovens are designed for curing special powder coatings or other purposes. Uses electricity as heating source, high temperature curing ovens feature easy-operating and environmental-friendly.

Model	COLO-1818
Working Dimension	W1800 * H1800 *D1800 mm
Power Supply	electric
Voltage	220V/380V/415V, 3 phase
Frequency	50-60hz
Insulation	200mm thickness
Inner Wall	Stainless Steel 1.5mm
Outer Wall	Coated Galvanized
Door Type	double, in one side
Warm-upTime	30-40min
Temperature Stability	< ± 1°C
Max. Temperature	500℃
Parts Transportation	Top
Air Circulation	Forced

Infrared Catalytic Gas Burner

Electric pulse igniter

Solenoid Valve

Ignition pin

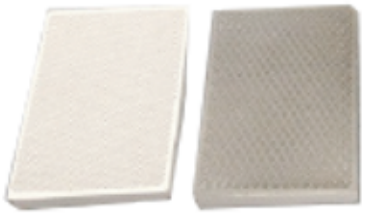

Infrared Catalytic Ceramic Plate

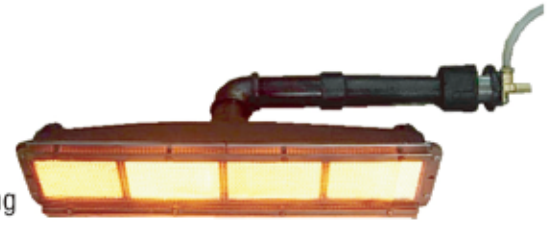

Working

Specification

Model	Dimension	N.W.	Gas Type	Heat Output		Consumption	
	mm	kg		KW/h	Kcal/hr	NG(m3/h)	LPG(kg/h)
HD162	570*130*175	8	NG/LPG	6.3	5400	0.49	0.45
HD242	840*130*175	11.7	NG/LPG	9.4	8120	0.75	0.68
HD262	930*130*175	13	NG/LPG	10.9	9360	0.8	0.74

Note : When you order please advise the source type and working voltage details

Temperture Profiling For Coatings, Powders

COLO-SMT-7

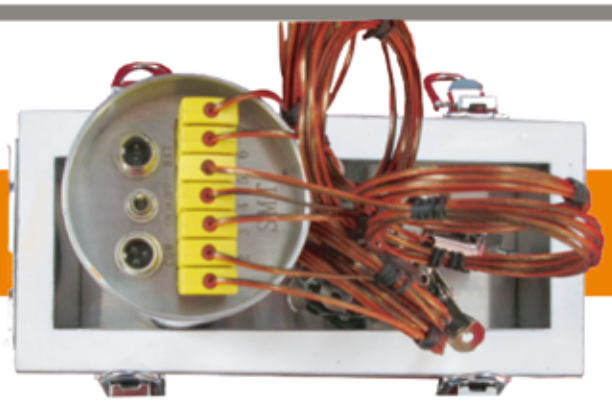

Channel Number	7 Channel				
Temperature	0~500C	Thermocouple	K	Memory	128 K
Resolution	0.5c				
Use Time	600min under 100C ,or 120min under 200C or 60min under 300C				
Recorder Time	4h under sample rate 1s				
Sample Rate	1s, 2s, 3s, 5s, 8s, 10s, 12s, 20s,40s, 60s				
Thermal Barrier	280(length) x 120(width) x 100(height)				
Setting Software (TrendReader V1.22)	1) To select or unselect each channel with Yes or NO 2) To verify the accuracy separately for each channel 3) Easy to choose sample rate 4) Switch ON/OFF				
Analysis Software (TrendReporter V1.0)	1) To display temperature data 2) To calculate heating rate between two temperature level 3) To calculate total time above two different temperature 4) To Calculate Peak Temperature 5) To Compare different temperature profile 6) To Print Report				

COLO-SMT-4

Channel Number	4 Channel
thermocouple	K
Use time	60min under 300C .
Thermal Barrier	325(length) x 125(width) x 125(height)
Memory	per channel can record and store 16 000 data
Sample Rate	1s, 2s, 3s, 4s, 5s, 6s, 10s, 20s, 30s, 1min, etc., can be selected by the user
Computer request	windows 98, 2000, XP ect ,through the computer to print out temperature curve
Setting Software	a) sampling period Optional b) start / stop recording easy
Analysis Software	a) The curve optional display or not display b) can be calculated at any temperature between the two heating rate; c) be able to calculate the temperature higher than a four time; d) can be calculated peak temperature; e) be able to compare test data 2-5 times
Standard configuration	* Four-channel Temperature Tracker * 4pcs of 1.75 meters temperature probe * Computer connection cable * Data processing software, data analysis software * Stainless steel incubator, including suspension handle * Operating Manual

Lab Equipment For Powder Coating

Lab spray booth

COLO-S-04548-T

(W400mm*H500mm*D480mm)

Lab curing oven

COLO-4355-T

(W300mm*H450mm*D300mm)

COLO-E02-01
cross cut tester

COLO-E05-03
Paint film impact tester

COLO-QL-1076
Laser Particle Size Analyzer

COLO-191S-T-C

Colo-V-T2
Portable Voltage tester

Colo-8856N
microprocessor thickness meter

Colo-0686
Gloss Meter

Pre-treatment

Spraying tunnel

dip tank with Hoist

We also produce the different types of sandblasting machines that suitable for surface treatment of all products of metal.

For more details please visit our sandblasting equipment catalogue

Layout Of Powder Coating Line For Your Special Request

Before design a powder coating line for you please supply below information:

- Product name, material, If possible sent photos
- The workpiece Max size(LxWxH), max weight, and output per 8hours. Or advise the line speed you need
- What kind of heating energy for oven, such as electricity, diesel, or gas energy.
- How many kinds of powder colors.
- What's the size (Length x Width x Height)of your workshop?Supply workshop drawing
- Advise industrial and living electricity voltage in your factory, single-phase220v or three-phase 380/ 415 v

Manual coating plant process

Manual powder coating plant, with overhead track or ground moveable trolley in powder coating booth and oven. Powder coating booth could be manual or automatic, oven is box type. Could choose different type according to different coating requirements. It is designed to handle special parts, such as complex and small quantity parts. the manual powder coating line also suitable for some first time use powder coating plant.

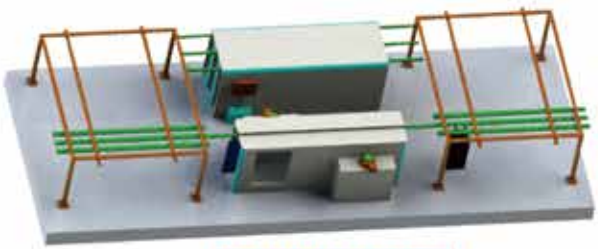

COLO-L-M01

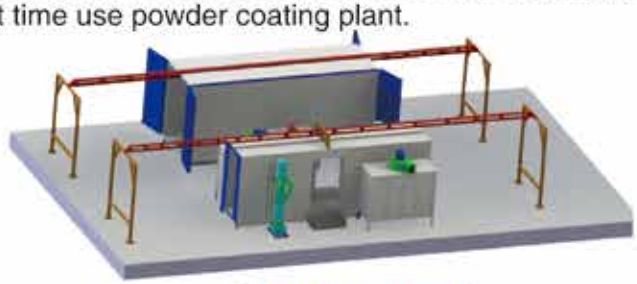

COLO-L-M02

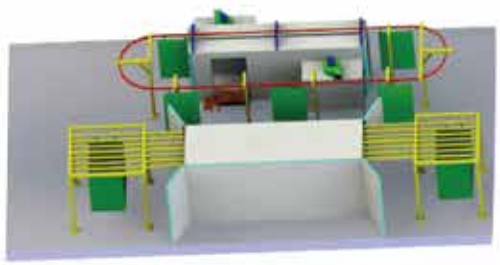

COLO-L-M03

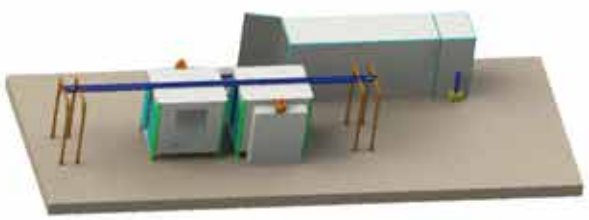

COLO-L-M04

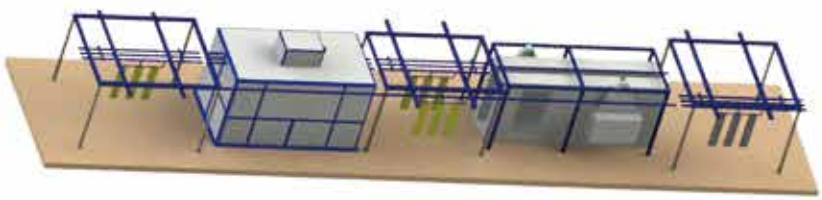

COLO-L-M05

COLO-L-M06

COLO design, manufacture and install this manual powder coating plant in South Korea for the 6m aluminum profile.

Batch powder coating plant for client in Australia

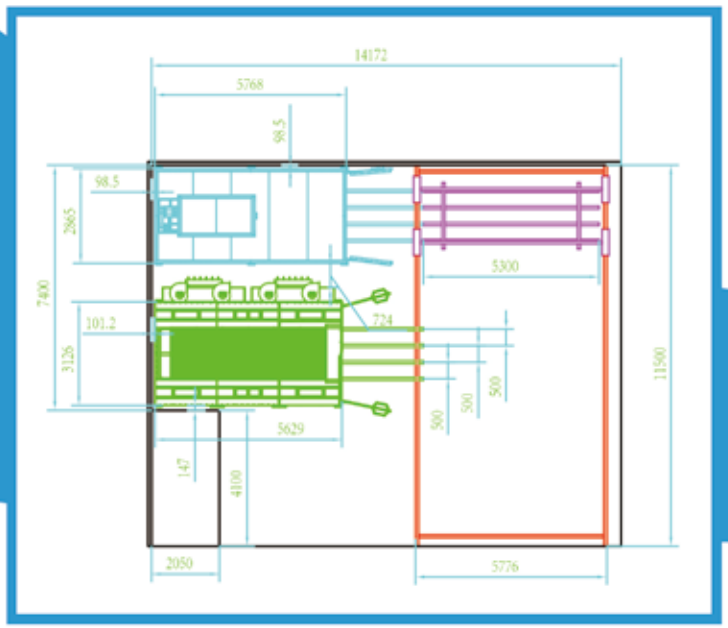

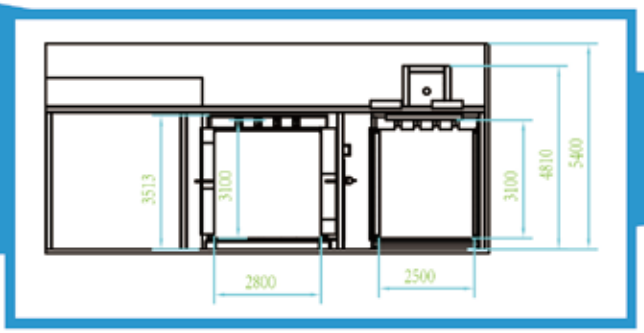

- Suitable for factory space size more than: 7400*14200mm
- For workpiece less than Width: 2000mm
- Height: 1800mm
- Length: 5000mm

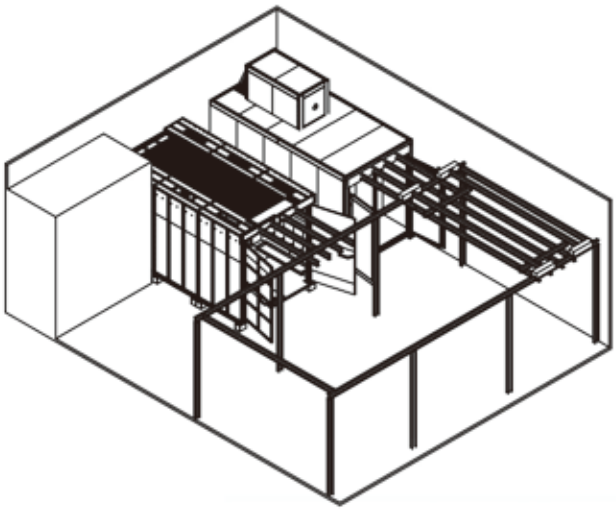

Brett, 9:27

We were very impressed with your service and the finished product. Our oven traces show only 2-3 degrees heat variance over the entire oven during heat up which is amazing

① Customer's workpieces before powder coating

② after powder coating, come out from the powder spray booth

③ after curing, come out from the oven

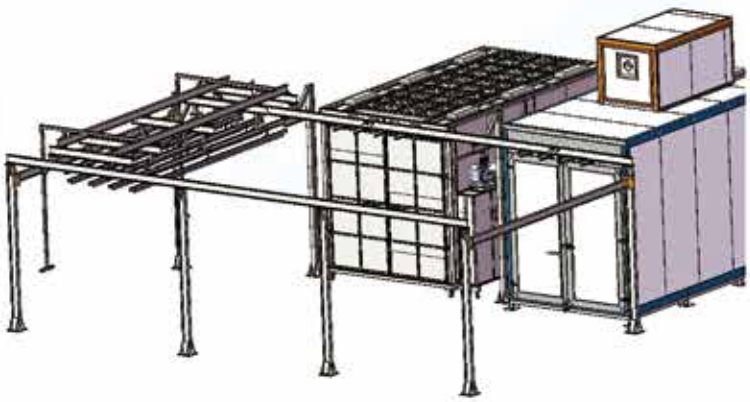

Finished drawing of powder spraying on other parts of the customer

Traditional tunnel type

Normal single conveyor, tunnel oven. The part turn moves along with conveyor always, even tum the corner. The output capacity is bigger if the conveyor speed is faster, but the oven length will be longer accordingly.

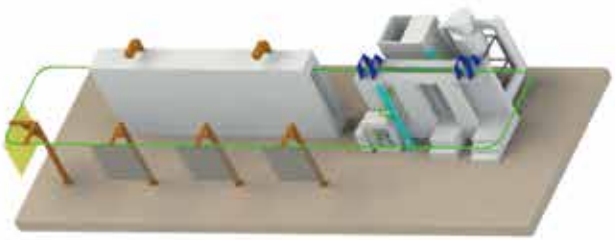

COLO-L-01

COLO-L-02

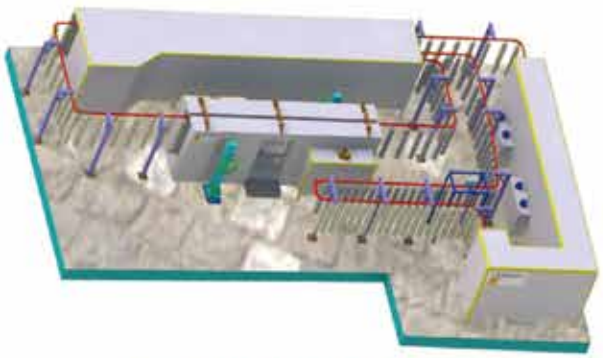

COLO-L-03

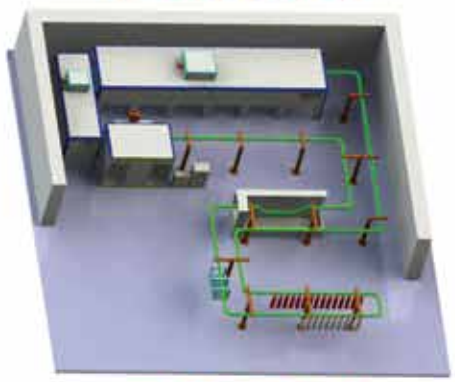

COLO-L-04

COLO design, manufacture and install this manual powder coating plant in Argentina for mass production metal spare parts.

Compact Powder Coating Plant for Aluminum Profile

The conventional type Horizontal Powder Coating Plant it uses very long and big space and henceit is difficult for existing factories to consider production expansion. However, with Compact System, it only needs about 300 m² of land (15 x 20 meters) therefore it is ideal for factories having limiting space. (Space high at least 6m)The capacity of this design is limited about 3 -4tons of profile in 8 hours.

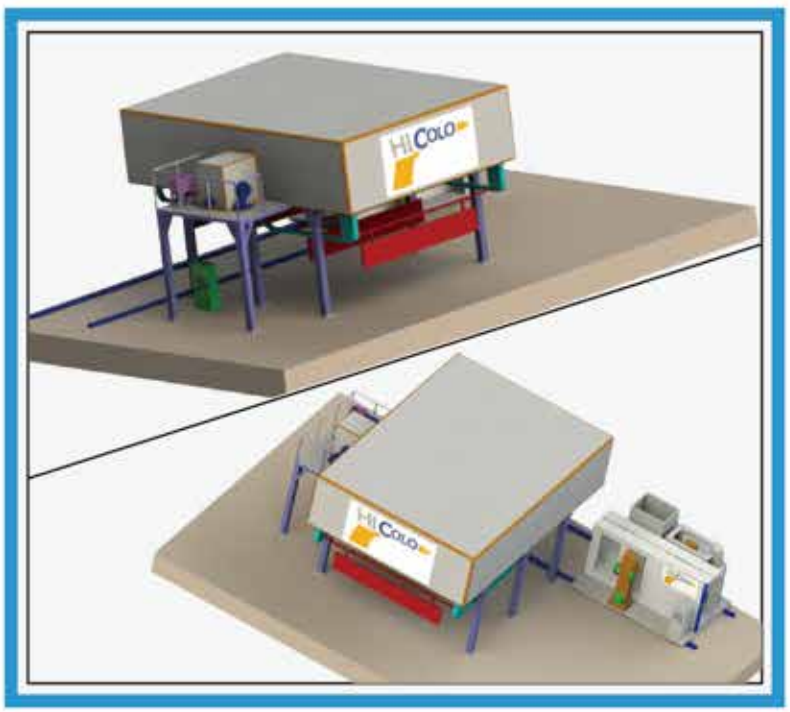

We designed, manufactured and installed this compact powder coating plant in Indonesia for the 6m aluminum profile.

Conveyor system

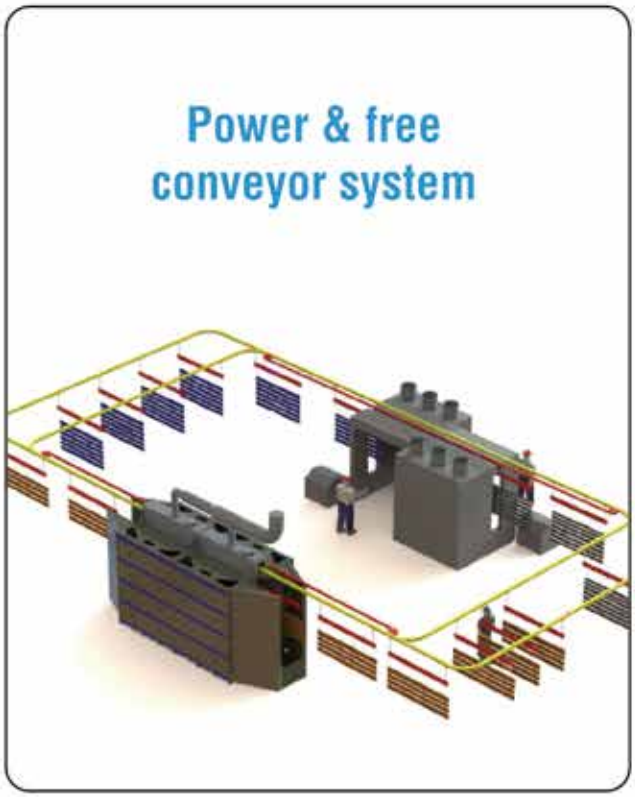

Power & free conveyor is highly automatic and integrative, which can stop individual loads without stopping the entire production line. The main conveyor is moving continuously, but another loading conveyor just move step by step, the output capacity can be very big if the main conveyor speed is fast, no need to enlarge the oven size. So it takes smaller space then the common tunnel oven design.

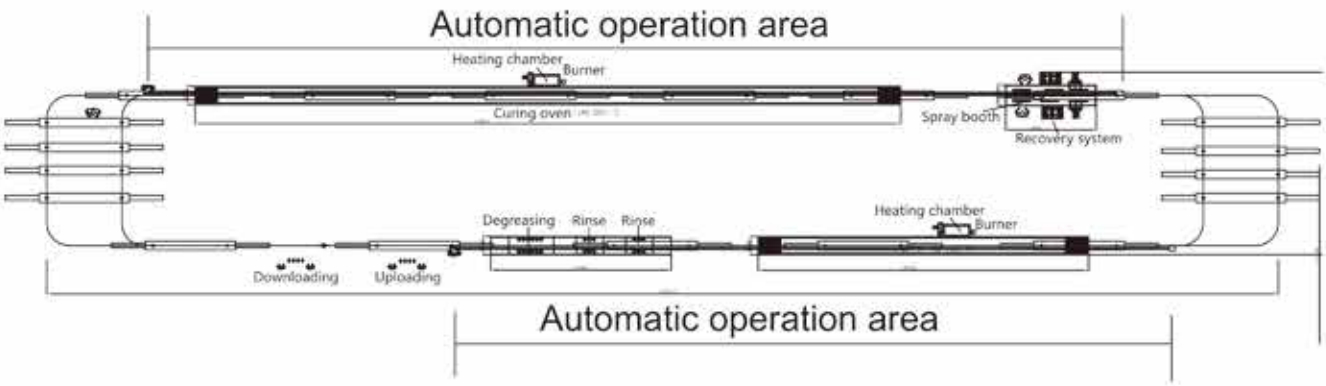

Vertical Powder Coating System

Vertical powder coating system provides high production capacity with the ability to economically powder coat aluminum profile in small runs with multiple powder color changes each shift. The system is designed to automatically powder coating aluminum profile in lengths up to 6m, could reach production 40-60 tons one day (8 hours).

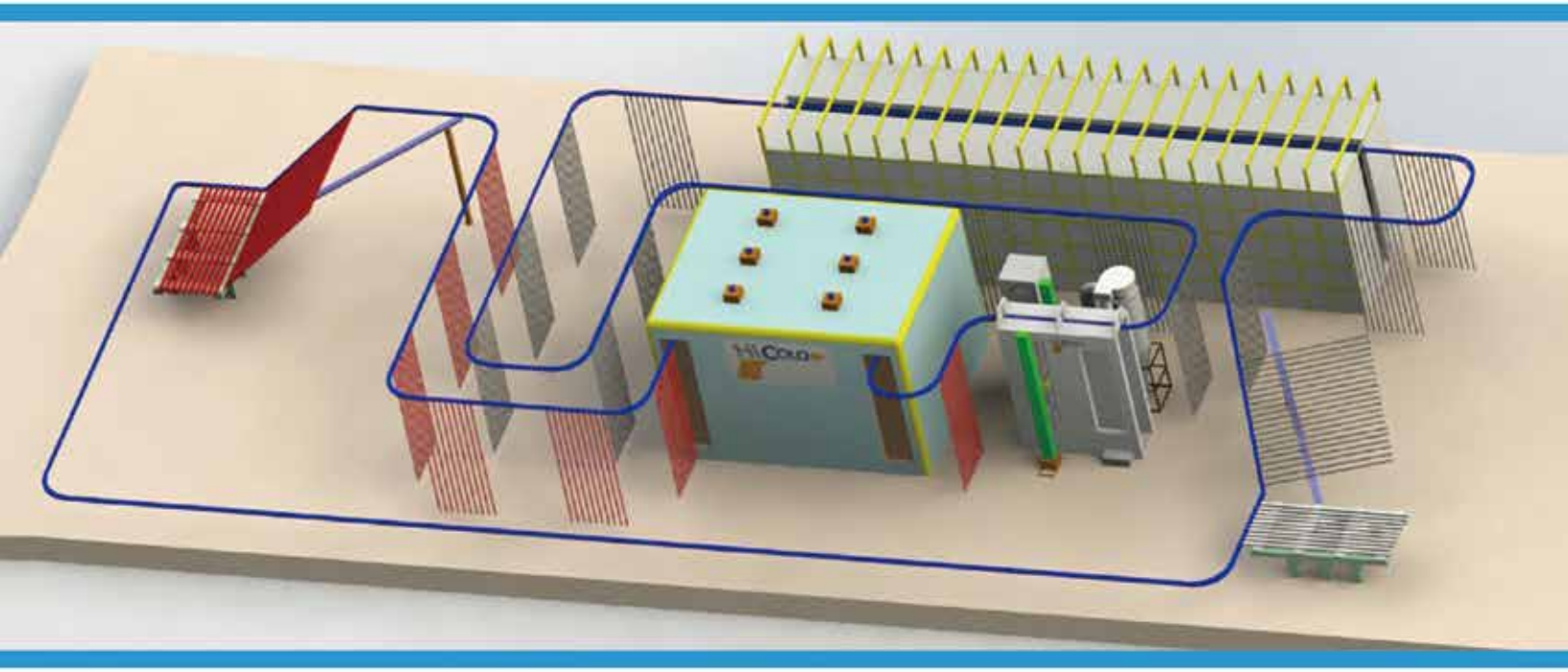

Our engineer guided installation this powder coating plant in Saudi Arabia.

Conveyor System And Accessories

Chain(loading up to 12kgs/30kgs/50kgs/100kgs/250kgs or special weight)

150 type UH-50750HA

150 type UH-5075-S

200 Type

7075standard chain

250 single hanger chain

X348 chain track combination

458 type with trolley

X458 chain hanging arm combination

Drive Unit

Tension Unit

Track

Control Unit

Conveyor System And Accessories

Horizontal elbow 180°

Lifting group

Inspection track

track 150

Spreader (custom design available)

G-Type

S-Type

C-Type

U-Type

Common Type

Auto Lubricator for conveyor chain system

Manual oil cup

Liquid Painting Booths

Our product range includes a wide range of dry type liquid painting booth, liquid spray paint booth, electrostatic liquid spray paint booth and water washed type liquid painting booth.

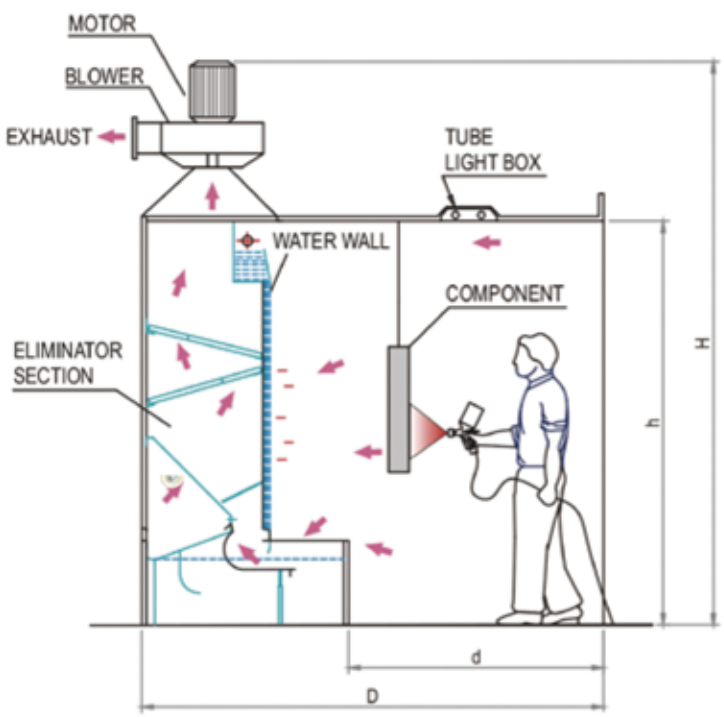

COLO-W-1500

- Efficient airborne particulate removal
- High-volume capture efficiency
- Water wash scrubber with enhanced impingement technology
- Proven Designs

Model	COLO-WPT1500
Width for Water Curtain Plate(mm)	1500
Fan Motor Power (KW)	0.75
Water Pump Power (KW)	0.55
Air Flow (m^3/h)	8000
External size (L*W*H mm)	1700*1800*2300
Weight (kgs)	500

Liquid Painting Booths

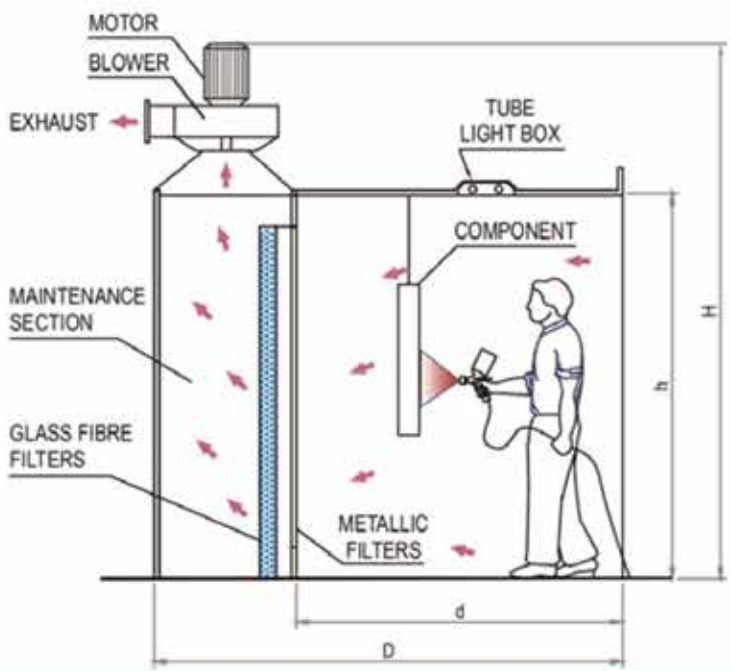

COLO-DPT2000

- Over-sprayed paint particulate be adsorbed by the filter through air blower.
- High-volume capture efficiency.
- Without water and chemical, good for environment.
- Easy maintenance.
- Ideal for all of paint applications.

Model	COLO-DPT2000
Width (mm)	2000
Fan Motor (KW)	1.5
Fan Motor Air Flow (m^3/h)	22000
External size (L*W*H mm)	2200*1500*2300
Weight (kgs)	480

COLO-Electrostatic Liquid Spray Gun

Power supply voltage	AC220 (50-60HZ)
Output voltage	12-24V
Protection power failure	30μA
Controller size	250*200*150
Electrostatic display	LED digital display
Air pressure	0.6-0.8MPa
Maximum output current	60μA
Controller weight	17KG
Electrostatic adjustment	stepless adjustment

COLO-L800

Brief Introduction Of The Function

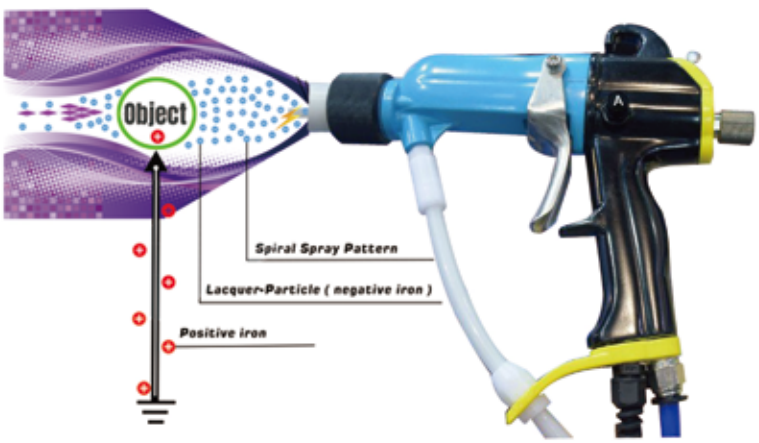

In this system, paint can be saved up to 35%. The film thickness is uniform. Nozzle can be selected according to the product you need to be painted, there are two versions of nozzle available. One is flat spray nozzle suitable for flat or big work-piece and the other one is round spray nozzle for tubular or small work-piece.

COLO-Electrostatic Liquid Spray Gun

Controller

all electrostatic parameters to provide the best gun performances in any conditions

COLO-3009 ideal for spraying solvent-based paints

Diaphragm pump

COLO-3009

Application-Industry

COLO Electrostatic Liquid Spray Gun

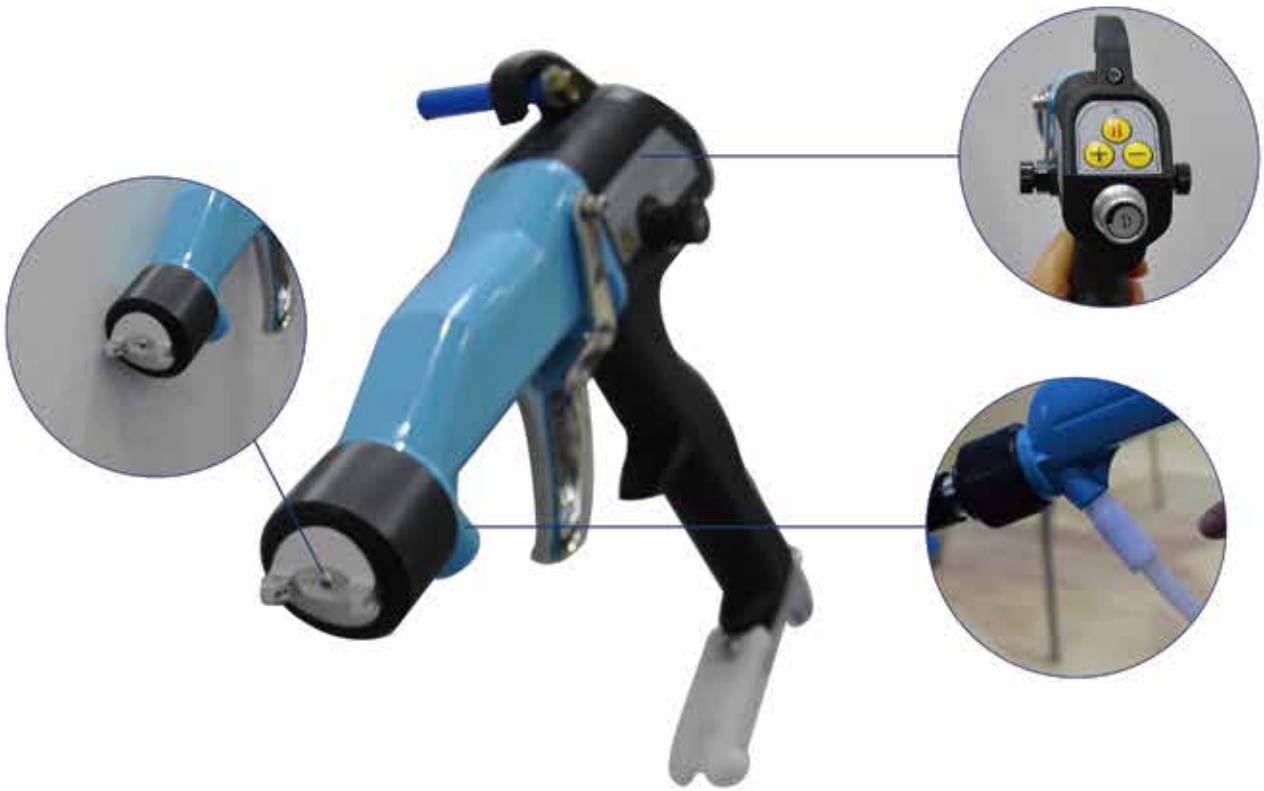

Different nozzles (Option)

COLO-3311

Material: Stainless Steel;

spray width (7mm to 25mm);

Feature: paint output softer

COLO-3313

Material: High-density

aluminum alloy ;

pray width (4mm to 15mm)

Feature: paint output faster

Transportation

Aluminum profile

Storage Rack

Other

To find your products by QR

CONTACT US

Hangzhou Color Powder Coating Equipment Co.,Ltd

Telephone: (86)571-8819 4898

Mobile: 0086 13906508694

Fax: (86) 571-85335616

Address: Building 34 No536 ,Shunfeng Road
Tangqi Town.Yuhang Distrct Hangzhou China.

zip code: 311106

Email: sales@colourspray.com

Website: www.colourspray.com